Stone Transportation

Gatwick Road (PO Box 5) Crawley West Sussex RH10 2RN
Telephone Crawley (0293) 27711 Telex 87132

Publication SX 1335

ILLUSTRATED LIST OF COMPONENTS
for
AIR CONDITIONING EQUIPMENT
Type UP 32

STANDARD CLASS & CATERING CARS
BRB/CIE
RO.200269

REVISION RECORD

REVISION		
NUMBER	DATE	INSERTED BY

REVISION		
NUMBER	DATE	INSERTED BY

4 Amended pages to this publication will have the amendment indicated by a black line on the left hand side of the page adjacent to the paragraph or illustration.
The figure adjacent to the black line will indicate the amendment number registered.

PACKAGED AIR CONDITIONING UNIT
TYPE UP32
CORAS IOMPAIR EIREANN STOCK
BUILT BY BRITISH RAIL ENGINEERING LTD.
ORDER NO RO/200269

SPARE PARTS INDEX NO SX 1335
One Sheet Only

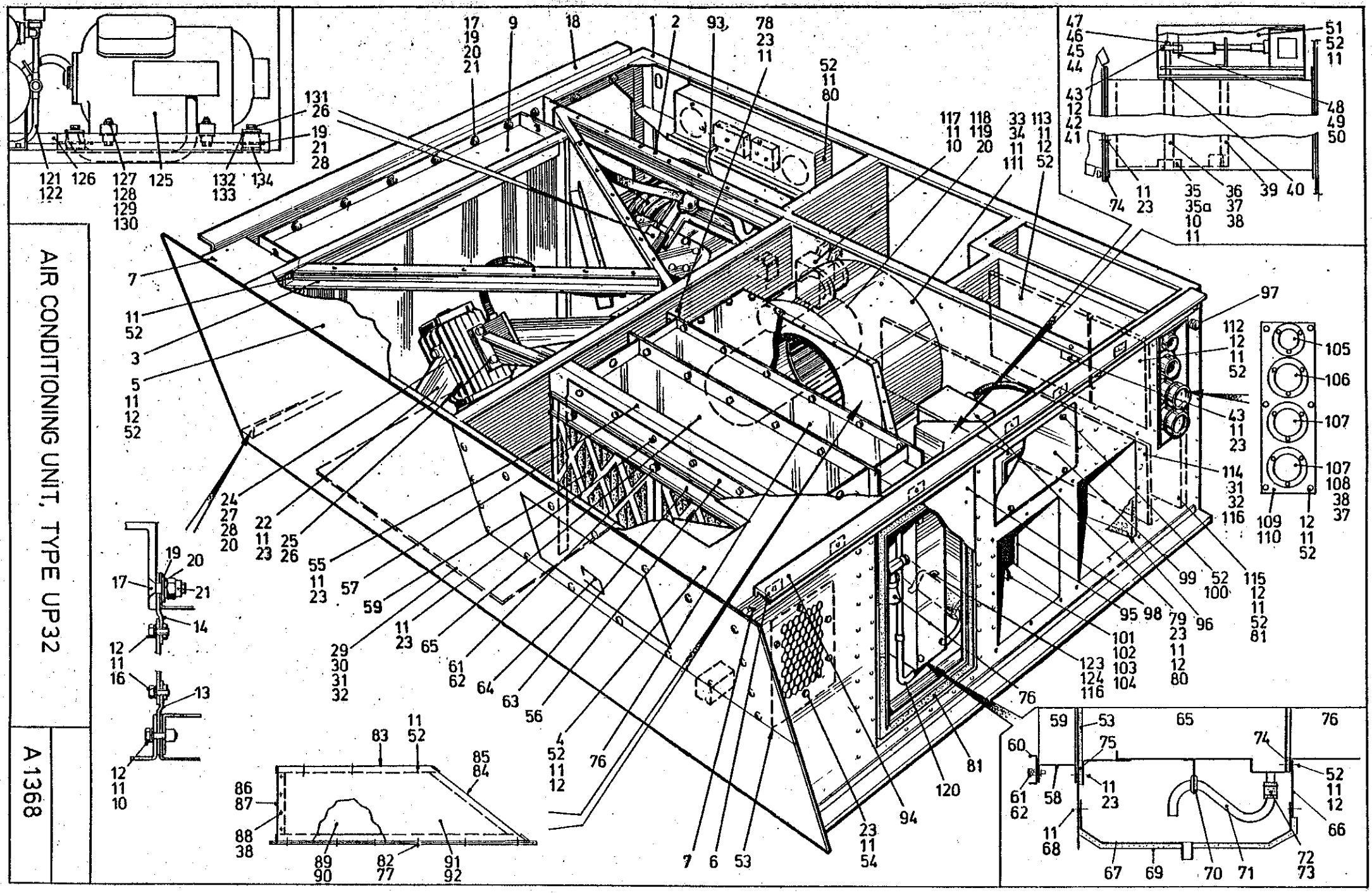

AIR CONDITIONING UNIT, TYPE UP32

A 1368

SPARE PARTS LIST

EQUIPMENT :- UNDERFRAME AIR CONDITIONING UNIT, TYPE UP32 — No. TS 6875

DRAWING No. J 333028

SPECIFICATION No. -

ILLUSTRATED PLATE No. A. 1368

SHEET No. 1

No. OF SHEETS 5

ITEM No ON PLATE	QTY	DESCRIPTION	PART NUMBER
		Complete Unit, Type UP32	333028
1	1	Steel Framework	334365
2	1	Removable Tie	913278
3	1	Top Cover Channel	171721
4	1	Removable Top Panel (RH)	333767
5	1	Removable Top Panel (LH)	159919
6	6	Throat Washer	171736
7	2	Screw, M3 x 8 mm long Steel Csk Hd	-
8	1	Screw, M6 x 16 mm lg Stl Csk Hd	-
9	1	* Condenser Coil	333195
10	25	Screw, M6 x 25 mm long Stainless Steel Hex Hd	-
11	302	Grover Washer, M6 Stainless Steel	-
12	175	Plain Washer, M6 Stainless Steel	-
13	1	Condenser Guard bottom support	333737
14	1	Condenser Guard top support	333602
15	1	Condenser Guard	333605
16	6	Captive Screw	333879
17	25	Screw, M10 x 30 mm long Steel Csk Socket Hd	-
18	1	Top Angle (L.H.)	160100
19	35	Plain Washer, M10 Steel	-
20	32	Grover Washer, M10 Steel	-
21	35	Self Locking Nut (Aerotight Stiffnut, M10)	160382
22	4	Fan Motor Bracket	333424
23	58	Screw, M6 x 20 mm long Stainless Steel Hex Hd	-
24	1	* Condenser Fan Motor (GEC D100 Spec 258)	333402
		(see Spare Parts List No TS 6922, page 33)	
25	10	Screw, M12 x 16 mm long Steel Hex Hd.	-
26	14	Grover Washer, M12 Steel	-
27	1	* Condenser Fan (Turngrove Drg 01621/3)	333382
28	10	Screw, M10 x 25 mm long Steel Hex Hd.	-
29	1	Condenser Fan Guard	333689

* RECOMMENDED SPARES

NOTE: STANDARD FINISH ON FASTENERS
FERROUS, CADMIUM PLATED & PASSIVATED
NON FERROUS, ELECTRO-TINNED

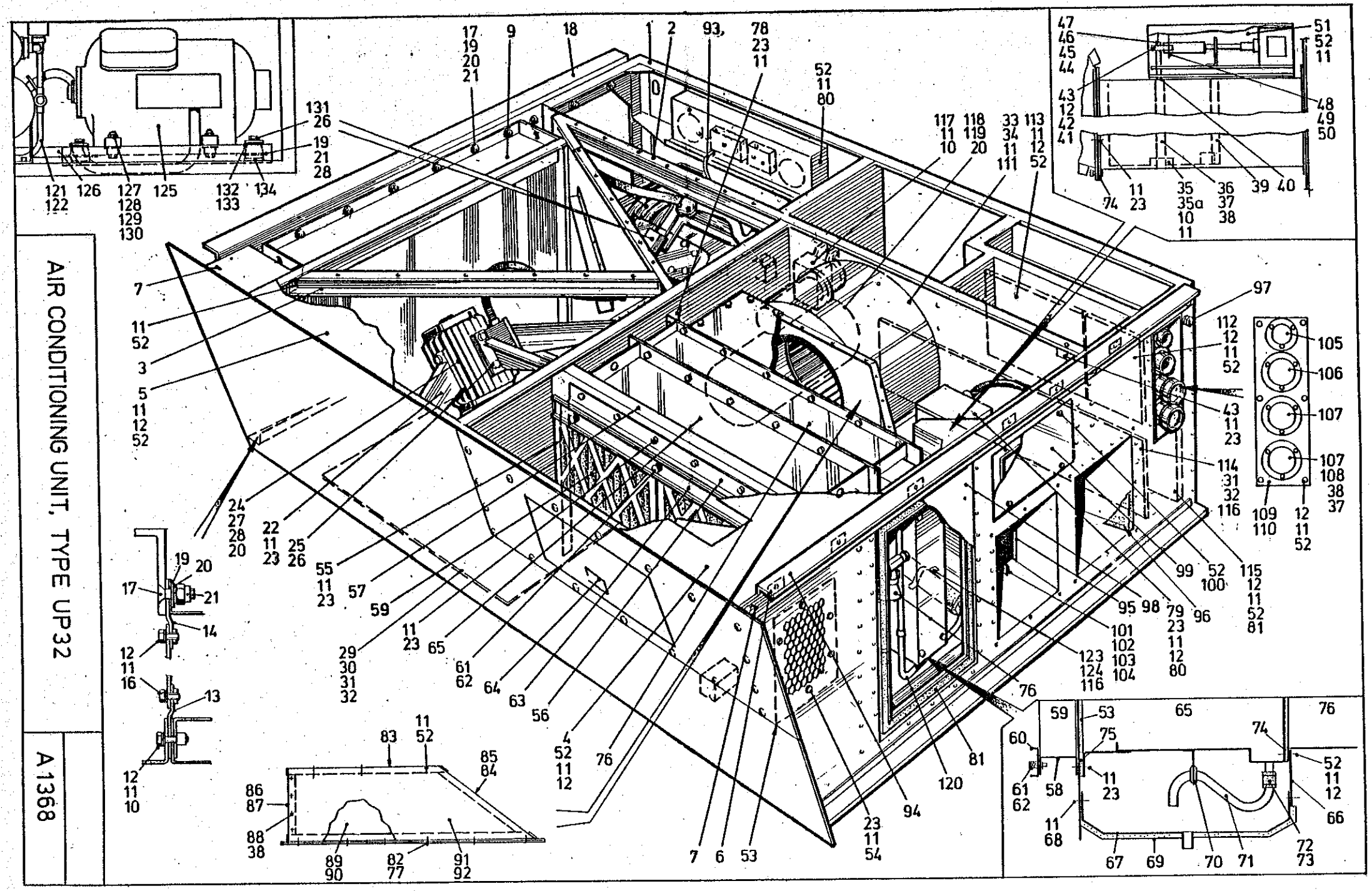

AIR CONDITIONING UNIT, TYPE UP32

A 1368

SPARE PARTS LIST

EQUIPMENT :- UNDERFRAME AIR CONDITIONING UNIT, TYPE UP32 — No. TS 6875

DRAWING No. J 333028

SPECIFICATION No. - — SHEET No. 2

ILLUSTRATED PLATE No. A. 1368 — No. OF SHEETS 5

ITEM No ON PLATE	QTY	DESCRIPTION	PART NUMBER
30	10	Screw, M8 x 20 mm long Steel Hex Hd	-
31	16	Grover Washer, M8 Steel	-
32	16	Plain Washer, M8 Steel	-
33	1	Fan and Motor Assembly Duct (see Spare Parts List No TS 6916, page 51)	333343
34	2	Fan Cowl Insulation	333814
35	1	Bearing and Housing Assembly	333839
35a		* Bearing only (Rose Bearings RAC06)	707828
36	1	Shaft	333829
37	18	Screw, M5 x 16 mm long Stainless Steel Hex Hd	-
38	75	Grover Washer, M5 Stainless Steel	-
39	1	Vane	333830
40	1	Spacer	333749
41	1	Lever	333824
42	2	Bolt, M6 x 30 mm long Stainless Steel Hex Hd	-
43	10	* Self Locking Nut (Aerotight Stiffnut M6 Stainless Steel)	316147
44	2	Screw, M4 x 12 mm long Stainless Steel Hex Hd	-
45	2	Grover Washer, M4 Stainless Steel	-
46	2	Plain Washer, M4 Stainless Steel	-
47	1	* Key (Parallel 3 mm x 3 mm x 12 mm long BS 4235)	707826
48	1	Pin	333825
49	2	Plain Washer, M8 Steel	-
50	2	* Split Pin (2 mm dia x 16 mm long Steel)	148365
51	1	Outlet Duct Solenoid Linkage (see Spare Parts List No TS 6918, page 59)	333827
52	218	Screw, M6 x 16 mm long Stainless Steel Hex Hd	-
53	2.5M	* Neoprene Strip (1/8" x 3/4" SH 40/50)	159802
54	1	Fresh Air Damper and Duct Assembly (see Spare Parts List No TS 6917, page 55)	333511

* RECOMMENDED SPARES

NOTE: STANDARD FINISH ON FASTENERS
FERROUS, CADMIUM PLATED & PASSIVATED
NON FERROUS, ELECTRO-TINNED

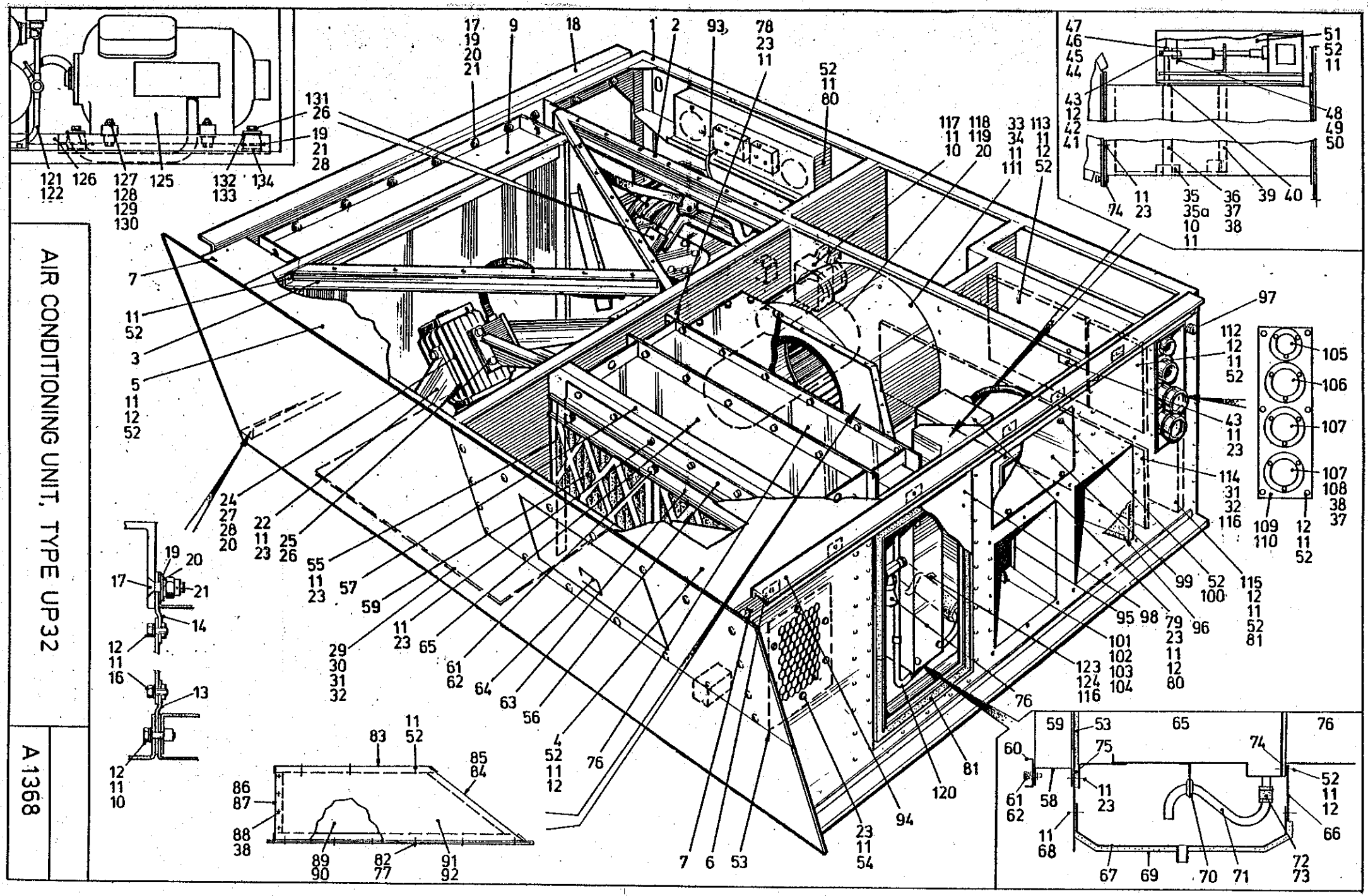

AIR CONDITIONING UNIT, TYPE UP32

A 1368

SPARE PARTS LIST

EQUIPMENT :- UNDERFRAME AIR CONDITIONING UNIT, TYPE UP32 — No. TS 6875

DRAWING No. J 333028

SPECIFICATION No. _ — SHEET No. 3

ILLUSTRATED PLATE No. A.1368 — No. OF SHEETS 5

ITEM No ON PLATE	QTY	DESCRIPTION	PART NUMBER
55	2	Filter Frame Side Angle	333392
56	1	Filter Frame (Top)	333394
57	22	Screw, M6 x 20 mm long Steel, Csk Socket Hd Longlok	-
58	1	Filter Frame (Bottom)	333393
59	2	* Filter (Interfilter Type IF2 HEG92)	707779
60	1	Bottom Filter Clamp	333396
61	6	Clamp Screw	333431
62	6	Retaining Washer	326641
63	1	Top Filter Clamp	333395
64	1	Filter Access Door	333489
65	1	* Evaporator Coil (see Spare Parts List No TS 6907, page 15)	333196
66	1	Drip Tray Support Plate	333430
67	1	Drip Tray	333384
68	6	Screw, M6 x 10 mm long Stainless Steel Hex Hd	-
69	1	Drip Tray Insulation	333813
70	0.15M	Grommet (Permark Flexiform G51H-B)	114789
71	3	Condensate Drain Tube	333360
72	0.1M	* Flexible PVC Hose (1/2" bore x 5/8" O.D.)	811061
73	6	Hose Clamp (YDNAC 'EMWARD')	707476
74	6M	* Glass Fibre Tape (20 mm x 1.5 mm thick)	810994
75	1M	* Neoprene Strip (1/8" x 1 1/4" SH 40/50)	159803
76	1	* Heater Unit (Redring Electric 586-1078-01) (see Spare Parts List No TS 6910, page 29)	333291
77	1	Bottom Heater Bracket	333367
78	1	L.H. Heater Bracket	333306
79	1	R.H. Heater Bracket	333321
80	14	Full Nut, M6 Stainless Steel	-
81	9.2M	* Sealing Strip (Norton V560 12 mm x 6.4mm thk)	811125
82	1	Duct Support Frame	333305

* RECOMMENDED SPARES

NOTE: STANDARD FINISH ON FASTENERS
FERROUS, CADMIUM PLATED & PASSIVATED
NON FERROUS, ELECTRO-TINNED

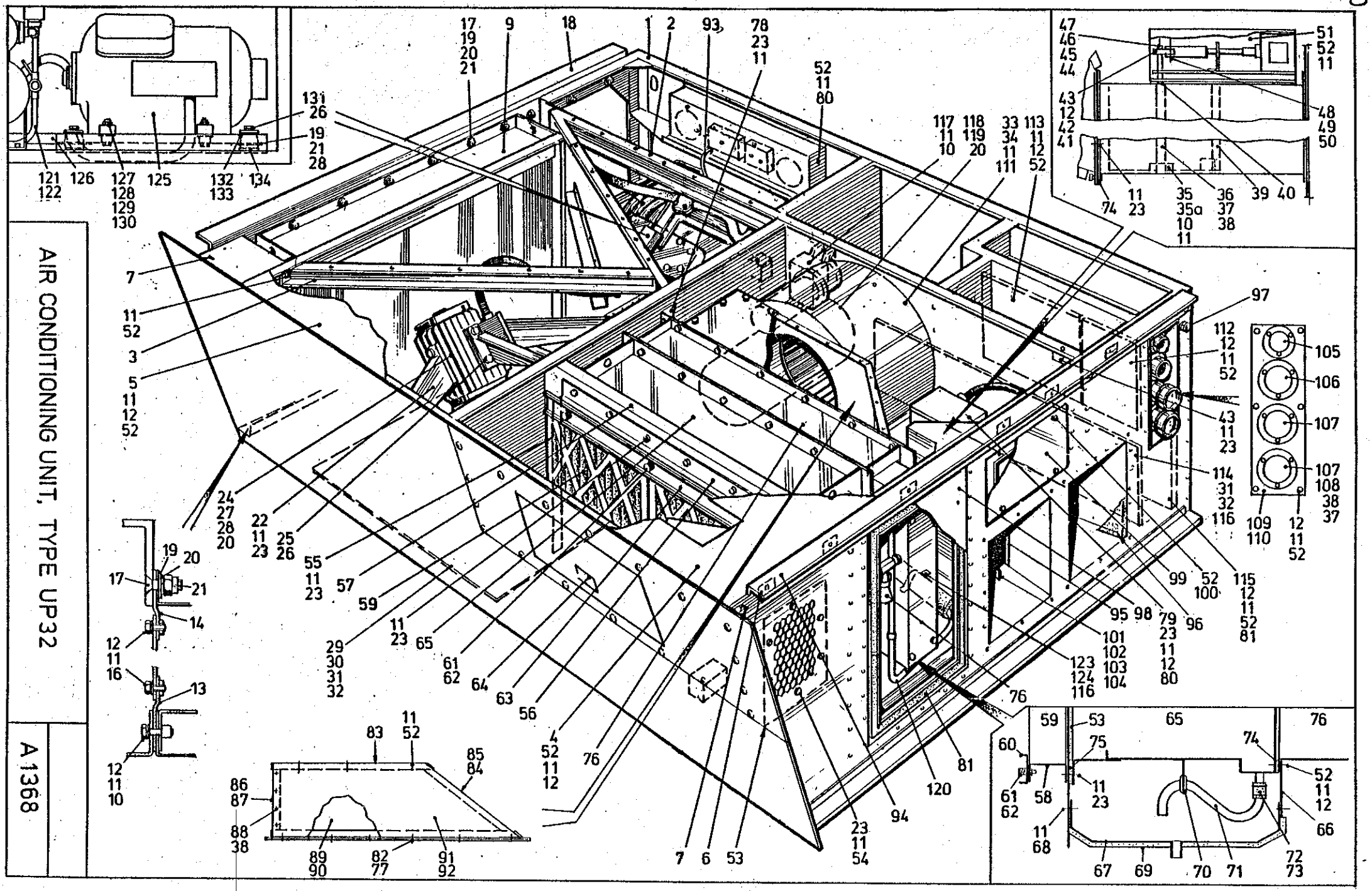

AIR CONDITIONING UNIT, TYPE UP32

A 1368

SPARE PARTS LIST

EQUIPMENT :- UNDERFRAME AIR CONDITIONING UNIT, TYPE UP32 — No. TS 6875

DRAWING No. J 333028

SPECIFICATION No. - — SHEET No. 4

ILLUSTRATED PLATE No. A1368 — No. OF SHEETS 5

ITEM No ON PLATE	QTY	DESCRIPTION	PART NUMBER
83	1	Duct Support Plate	333308
84	1	Side Duct Plate	333330
85	1	Insulation (Side - Long)	333818
86	1	Side Duct Plate	333310
87	1	Insulation (side - Short)	333817
88	60	Screw, M5 x 10 mm lg Stainless St Hex Hd	-
89	1	Bottom Duct Plate	333325
90	1	Insulation (Bottom Duct)	333816
91	1	Top Duct Plate	333309
92	1	Insulation (Top Duct)	333815
93	1	Electrical Connections (see Spare Parts List No TS 6915, page 49)	-
94	1	Top Angle (R.H.)	171734
95	2M	* Sealing Strip (Norton V560 15mm x 6.4mm thk)	811043
96	2	Insulation (Outlet Duct)	333831
97	2	Full Nut, M12 Brass	-
98	1	Inspection Cover (Heater)	159929
99	1	Inspection Cover (Solenoid)	159920
100	12	Retaining Ring (Half Grommet DZUS GH3-1/2")	807505
101	1	* Door Stop	108802
102	1	Screw, M3 x 10 mm long Stainless Steel Csk Head	-
103	1	Grover Washer, M3 Stainless Steel	-
104	1	Full Nut, M3 Stainless Steel	-
105	1	* 7-Pin Socket (LPA BX7A/INS/NC/BR)	707676
106	1	* 7-Pin Plug (LPA B17Q/21906/BR)	707677
107	2	* 5-Pin Plug (LPA B25R/2/914/BR)	707675
108	14	Plain Washer, M5 Stainless Steel	-
109	1	Plug and Socket Plate	333877
110	1	* Gasket	333878
111	8	Screw, M6 x 12 mm lg Stainless Steel Hex Hd	-

* RECOMMENDED SPARES

NOTE: STANDARD FINISH ON FASTENERS
FERROUS, CADMIUM PLATED & PASSIVATED
NON FERROUS, ELECTRO-TINNED

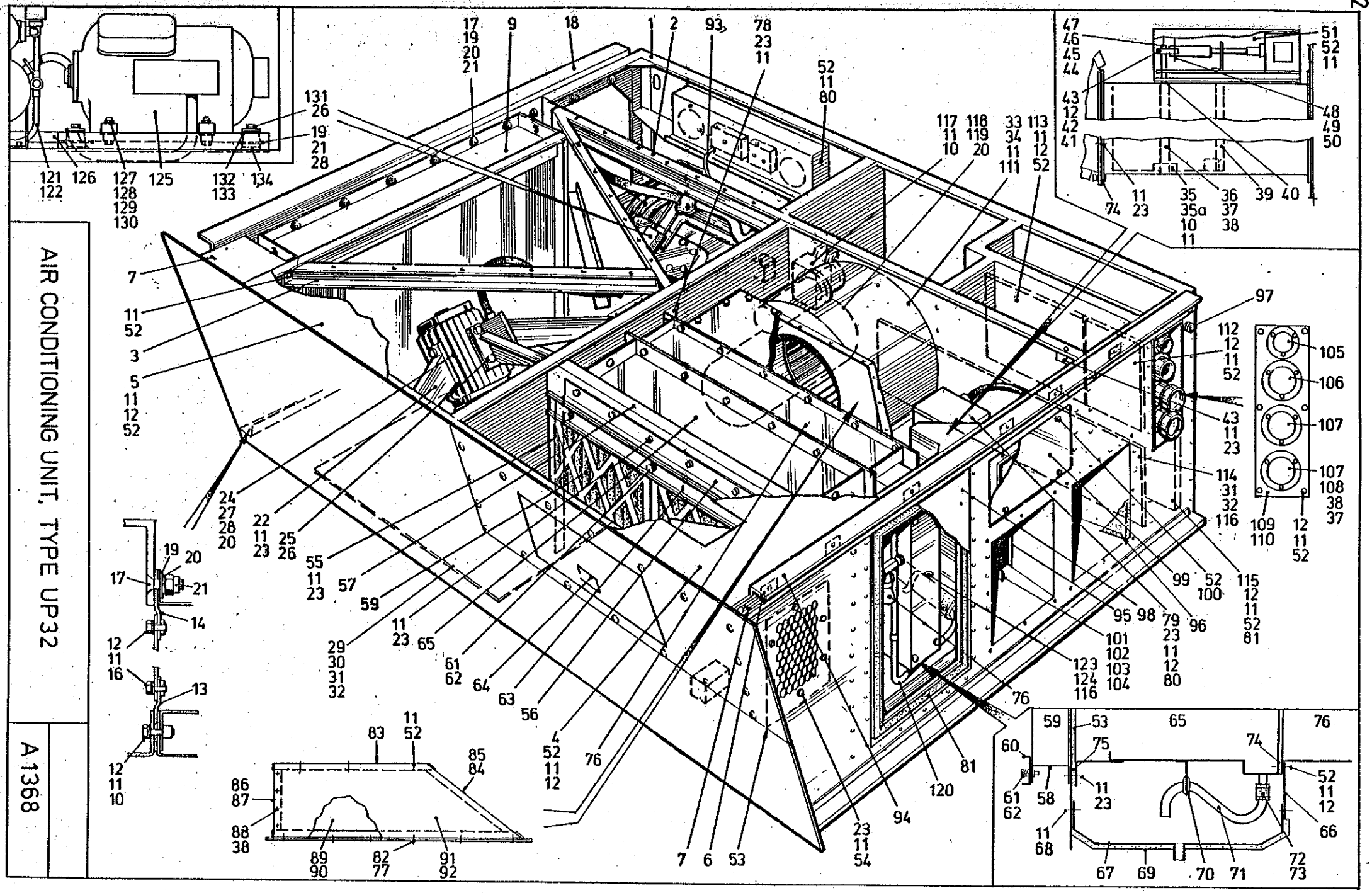

AIR CONDITIONING UNIT, TYPE UP32

A 1368

SPARE PARTS LIST

EQUIPMENT :- UNDERFRAME AIR CONDITIONING UNIT, TYPE UP32 — No. TS 6875

DRAWING No. J 333028

SPECIFICATION No. - — SHEET No. 5

ILLUSTRATED PLATE No. A.1368 — No. OF SHEETS 5

ITEM No ON PLATE	QTY	DESCRIPTION	PART NUMBER
112	1	Fuse Panel	333403
		(see Spare Parts List No TS 6913, page 43)	
113	1	Circuit Breaker Panel	333342
		(see Spare Parts List No TS 6912, page 41)	
114	1	Main Control Panel (T 7328)	333341
		(see Spare Parts List No TS 6911, page 35)	
115	1	Control Panel Access Cover	333774
116	16	Full Nut, M8 Steel	-
117	1	* 12-Pin Socket (LPA 24898)	707678
118	1	Liquid Receiver	333362
		(see Spare Parts List No TS 6909, page 25)	
119	5	Screw, M10 x 20 mm lg Steel Hex Hd.	-
120	1	Refrigeration Pipework	-
		(see Spare Parts List No TS 6914, page 45)	
121	2	Pipe Clip (Ross Courtney Type 260007-5/8")	707536
122	1.5M	* Glass Fibre Tape (1/2" x .007" thick)	801581
123	1	Pipe Support Plate	148696
124	1	Top Plate	148698
125	1	* Compressor (Dunham Bush 75UPH5Q)	707646
		(see Spare Parts List No TS 6908, page 17)	
126	1	Compressor Base	333368
127	4	Compressor Spacer	332321
128	4	Bolt, M16 x 100 mm long St Hex Hd.	-
129	5	Plain Washer, M16 Steel	-
130	5	* Self Locking Nut (Aerotight Stiffnut M16 Stl)	811343
131	4	Bolt, M12 x 75 mm long Steel Hex Hd.	-
132	4	Rebound Washer (Metalastik 15/286)	145667
133	4	* Antivibration Mounting (Metalastik 17/241-01X55)	156088
134	4	Overload Washer	109786

* RECOMMENDED SPARES

NOTE: STANDARD FINISH ON FASTENERS FERROUS, CADMIUM PLATED & PASSIVATED NON FERROUS, ELECTRO-TINNED

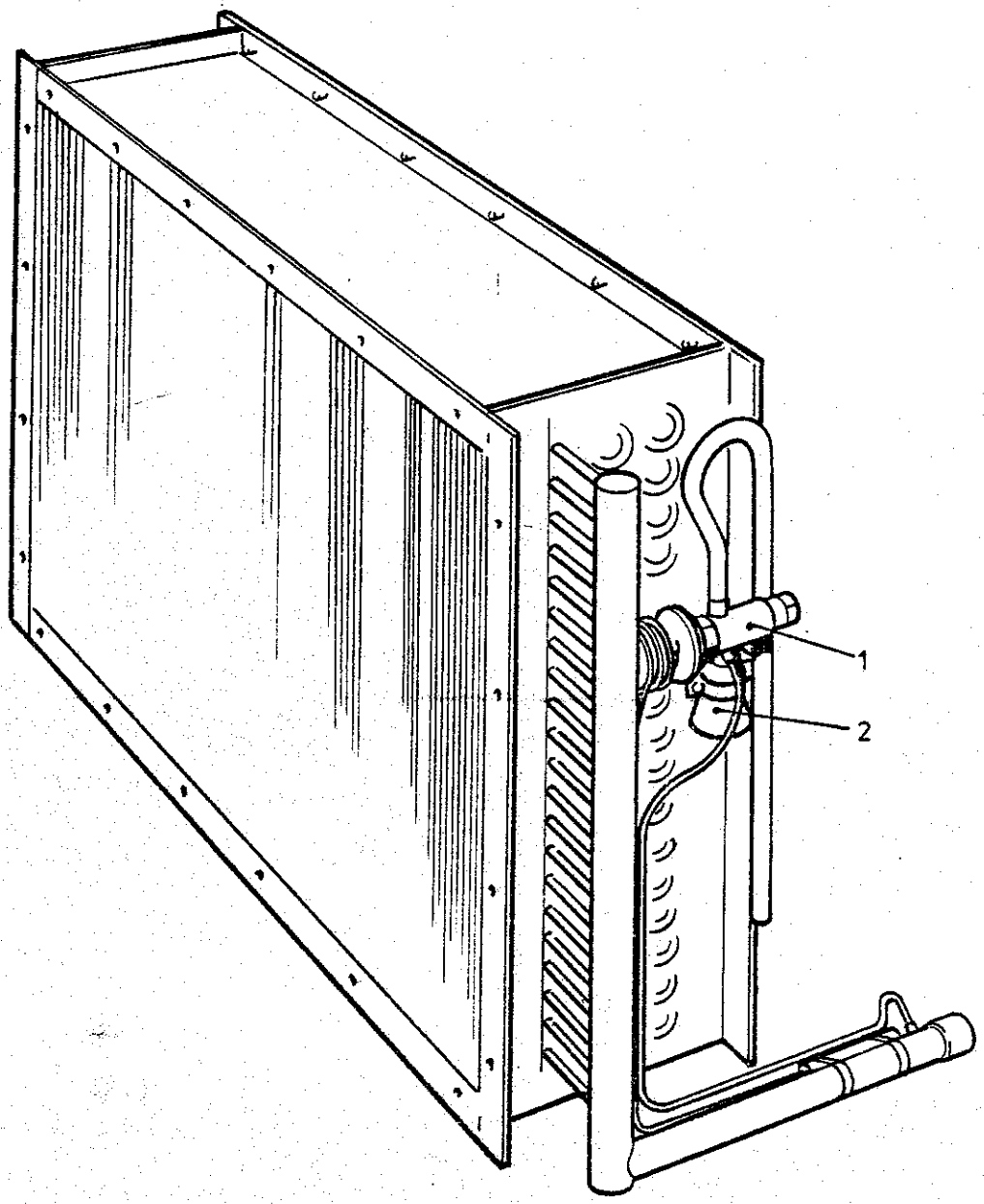

EVAPORATOR

A1369

SPARE PARTS LIST

EQUIPMENT :- EVAPORATOR COIL

No. TS 6907

DRAWING No. J 333916

SPECIFICATION No. -

SHEET No. 1

ILLUSTRATED PLATE No. A. 1369

No. OF SHEETS 1

ITEM No ON PLATE	QTY	DESCRIPTION	PART NUMBER
		Complete Evaporator Coil Assembly	333196
1	1	* Expansion Valve (Sporlan PFE-8-CP60 5/8" ODF Inlet, 1 3/8" ODF Outlet, 5 ft Capillary)	708172
2	1	Distributor (Sporlan 1126-22-3/16"-10)	707759

* RECOMMENDED SPARES

NOTE: STANDARD FINISH ON FASTENERS FERROUS, CADMIUM PLATED & PASSIVATED NON FERROUS, ELECTRO-TINNED

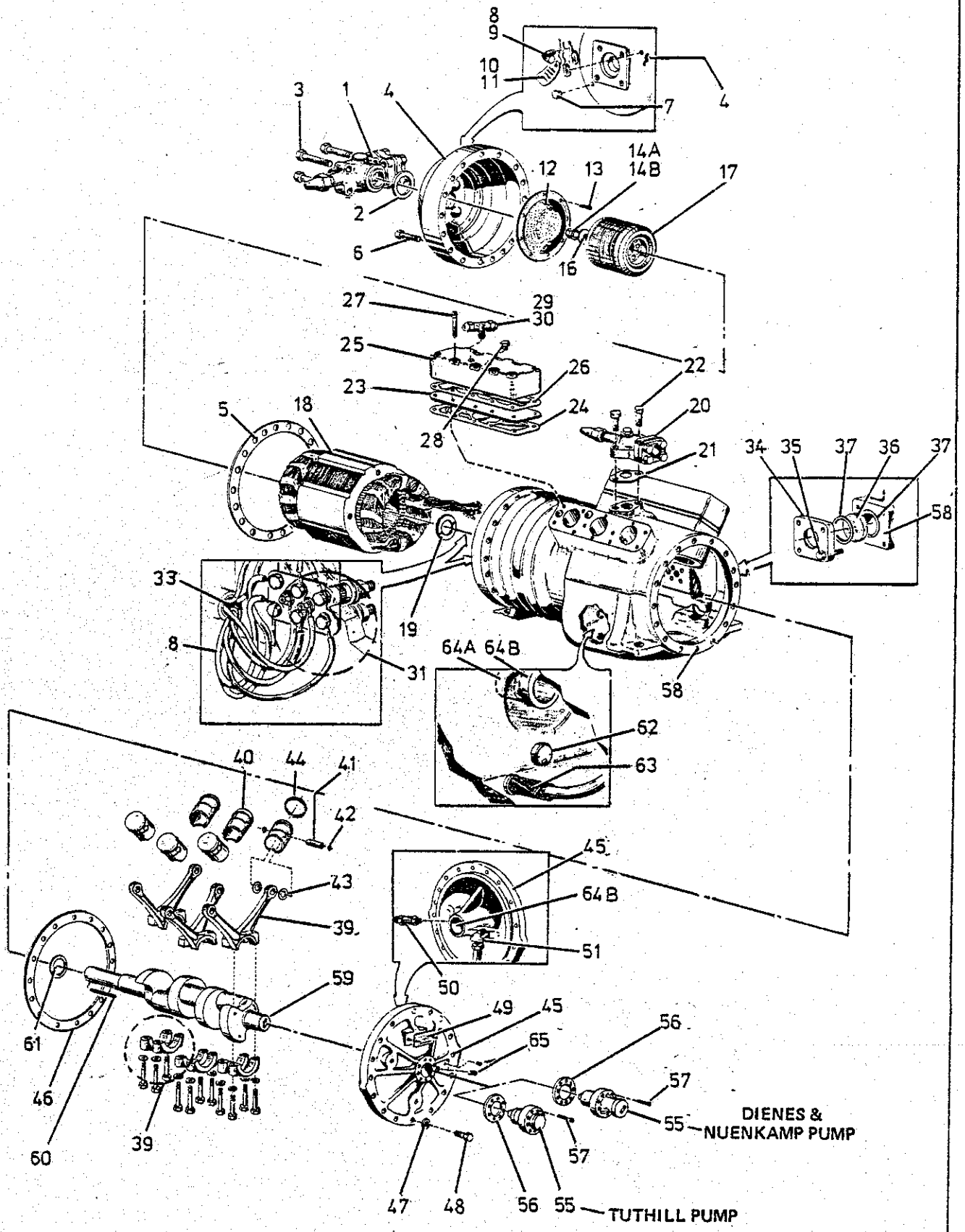

COMPRESSOR TYPE 77 UP HP(Q)

A1318-A

SPARE PARTS LIST

EQUIPMENT :- COMPRESSOR TYPE 75UPH5(Q) No. TS 6908

DRAWING No. K 333383

SPECIFICATION No. - SHEET No. 1

ILLUSTRATED PLATE No. A. 1318 No. OF SHEETS 4

ITEM No ON PLATE	QTY	DESCRIPTION		PART NUMBER
		Complete Compressor (less valves & unloader)		707646
1	1	Suction Service Valve 1.3/8"	(D-B 904-009-008)	708075
2	1	* Suction Valve Gasket	(D-B 908-002-026)	707230
3	4	Suction Valve Screw	(D-B 901-048-009)	708077
4	1	* Motor End Cover	(D-B COV61)	708054
5	1	* End Cover Gasket	(D-B 158-435-001)	707218
6	16	End Cover Screw	(D-B 012P13)	708055
7	1	End Cover Plug	(D-B 055P61)	707220
8	1	End Cover Elbow	(D-B 072P01)	707221
9	2	* Elbow Cap	(D-B 0212P02)	707222
10		Not Used		
11		Not Used		
12	1	* Suction Filter	(D-B 158-023-001)	707223
13	8	Filter Screw	(D-B SCR69)	707224
14A		Not Used		-
14B	1	Screw	(D-B 901-045-021)	708056
15		Not Used		
16	1	Rotor Retainer	(D-B RTR25)	707227
17	1	Rotor	(D-B 158-504-003)	708057
18	1	Stator	(D-B 158-503-003	708052
19	1	Outer Thrust Washer	(D-B GA1968)	708059
20	1	Discharge Service Valve 1.1/8"	(D-B VAL373)	707229
21	1	* Discharge Valve Gasket	(D-B 908-002-026)	707230
22	2	Discharge Valve Screw	(D-B 014P17)	707231
23A	1	* Valve Plate Assy(RH)Non-unload	(D-B 158-085-001)	707232
23B	1	* Valve Plate Assy(LH)Unloading	(D-B PLT2002A)	707233
24	2	* Valve Plate Gasket	(D-B 158-111-001)	707234
25A	1	RH Cyl. Head	(D-B HD98)	707235
25B	1	LH Cyl. Head	(D-B HD97)	707236
26	2	* Head Gasket	(D-B 158-110-001)	707237

* RECOMMENDED SPARES

NOTE: STANDARD FINISH ON FASTENERS FERROUS, CADMIUM PLATED & PASSIVATED NON FERROUS, ELECTRO-TINNED

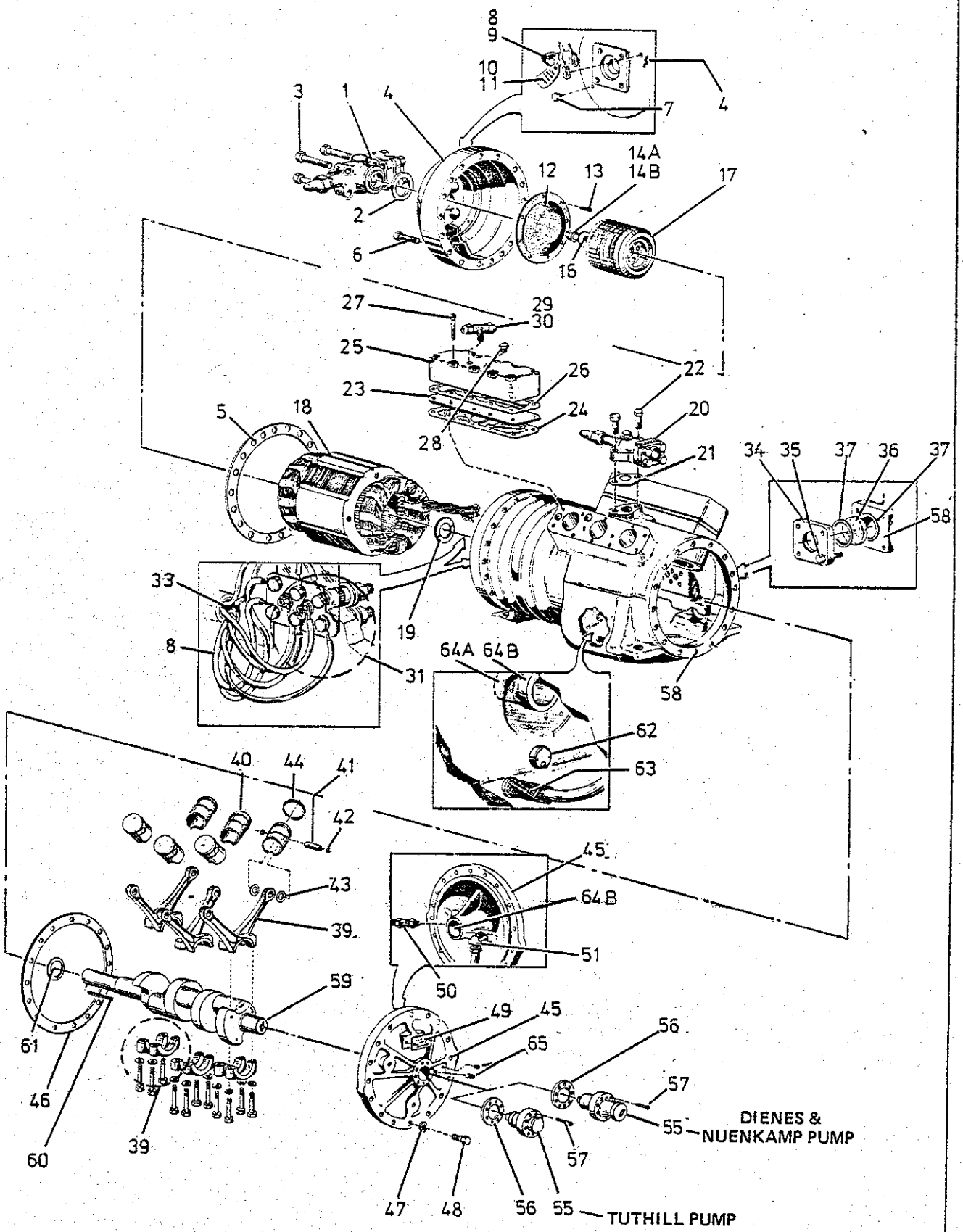

COMPRESSOR TYPE 77UPHP(Q)

A1318-A

SPARE PARTS LIST

EQUIPMENT :- COMPRESSOR TYPE 75UPH5(Q) No. TS 6908

DRAWING No. K 333383

SPECIFICATION No. - SHEET No. 2

ILLUSTRATED PLATE No. A.1318 No. OF SHEETS 4

ITEM No ON PLATE	QTY	DESCRIPTION		PART NUMBER
27	20	Valve Head Screw	(D-B 012P27)	707238
28	1	Plug	(D-B 055P61)	707220
29	1	Tee	(D-B GA1612)	708060
30	2	Cap	(D-B 0212P02)	707222
31	Kit	* Terminal Post Assy	(D-B 158-100-001)	708061
32		Not Used		
33	1	Bushing	(D-B BUS39)	708062
34	1	Sight Glass Retainer	(D-B GB1091)	708063
35	4	Retainer Screw	(D-B 011P11)	708064
36	1	* Sight Glass	(D-B GA1228)	708065
37	2	* Sight Glass Gasket	(D-B 158-067-001)	707247
38		Not Used		
39	6	Conn Rod Assembly	(D-B ROD43)	708066
40	6	Piston & Pin	(D-B GB1001)	708067
41	N/A	Piston Pin		-
42	12	Piston Pin Retainer	(D-B 0580P11)	708068
43	12	Piston Washer	(D-B GA1013)	708069
44	-	Piston Ring (Not Fitted)		
45	1	End Cover	(D-B GD1218T1)	707253
46	1	* End Cover Gasket	(D-B GA1209)	707218
47	1	Bolt Seal	(D-B GKT342)	707255
48	16	End Cover Screw	(D-B 012P13)	707256
49		Not Used		
50	1	Pressure Relief Valve	(D-B GA1581)	707257
51	1	Connecting Elbow	(D-B 051P36)	707258
52		Not Used		
53		Not Used		
54		Not Used		
55	1	* Oil Pump	(D-B PMP85A)	707259
56	1	* Oil Pump Gasket	(D-B GKT-0312)	707260
57	8	Oil Pump Screw	(D-B 034P10)	707261

* RECOMMENDED SPARES

NOTE: STANDARD FINISH ON FASTENERS
FERROUS, CADMIUM PLATED & PASSIVATED
NON FERROUS, ELECTRO-TINNED

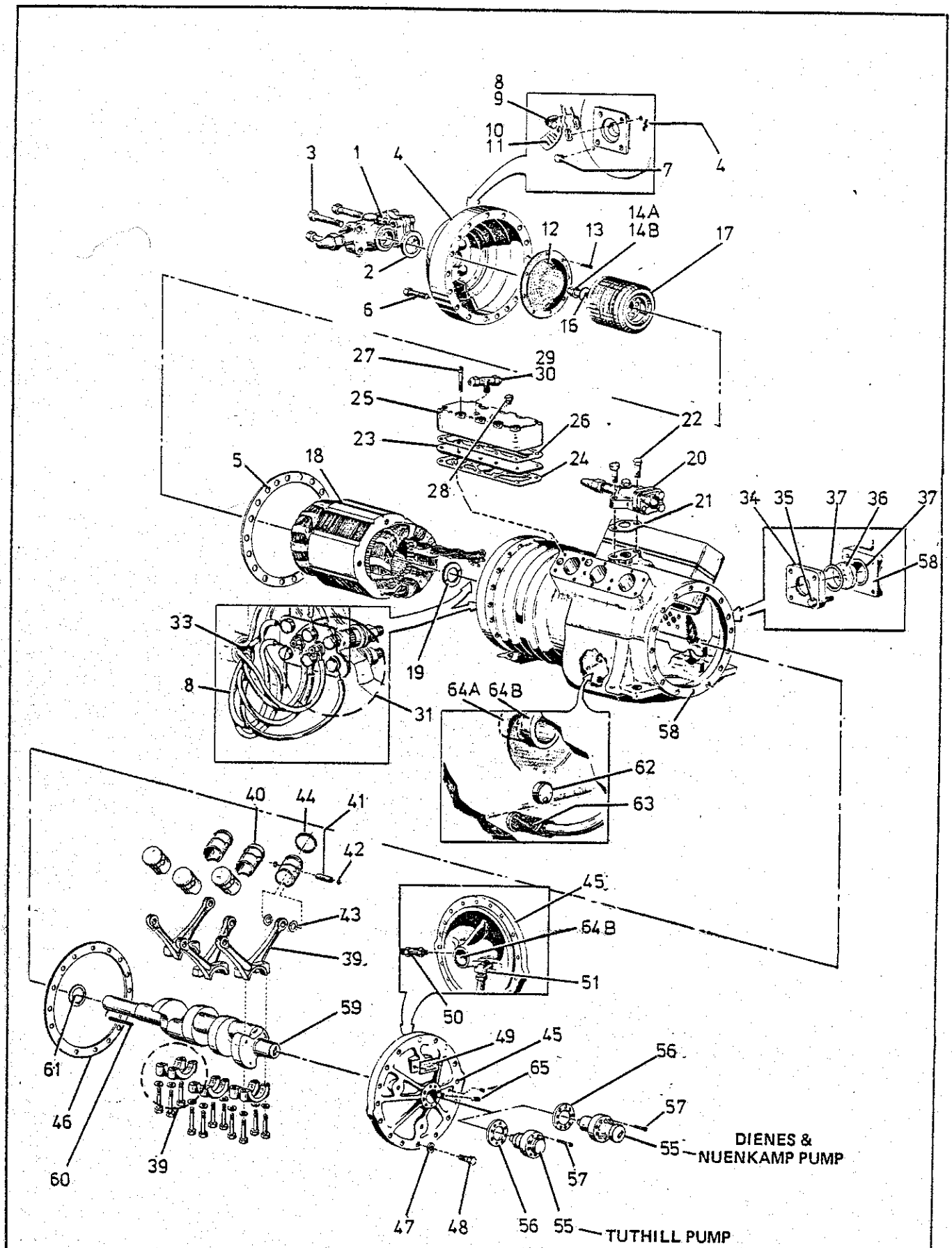

COMPRESSOR TYPE 77 UP HP(Q)

A1318-A

SPARE PARTS LIST

EQUIPMENT :- COMPRESSOR TYPE 75UPH5(Q)

No. TS 6908

DRAWING No. K 333383

SPECIFICATION No. -

SHEET No. 3

ILLUSTRATED PLATE No. A.1318

No. OF SHEETS 4

ITEM No ON PLATE	QTY	DESCRIPTION		PART NUMBER
58	N/A	Crankcase		-
59	1	Crankshaft	(D-B CKS34)	708070
60	1	Shaft Key	(D-B KIT369)	708071
61	1	Inner Thrust Washer	(D-B GA1969)	707264
62	1	Foam Control Valve	(D-B VAL496)	708072
63	1	* Oil Strainer Assembly	(D-B GB1381)	707266
64A	1	+*Bearing	(D-B BRG123)	707267
64B	2	+*Bearing	(D-B GA1550)	708073

+Field replacement of bearings require line boring

N/A Not avilable as a separate item

* RECOMMENDED SPARES

NOTE: STANDARD FINISH ON FASTENERS FERROUS, CADMIUM PLATED & PASSIVATED NON FERROUS, ELECTRO-TINNED

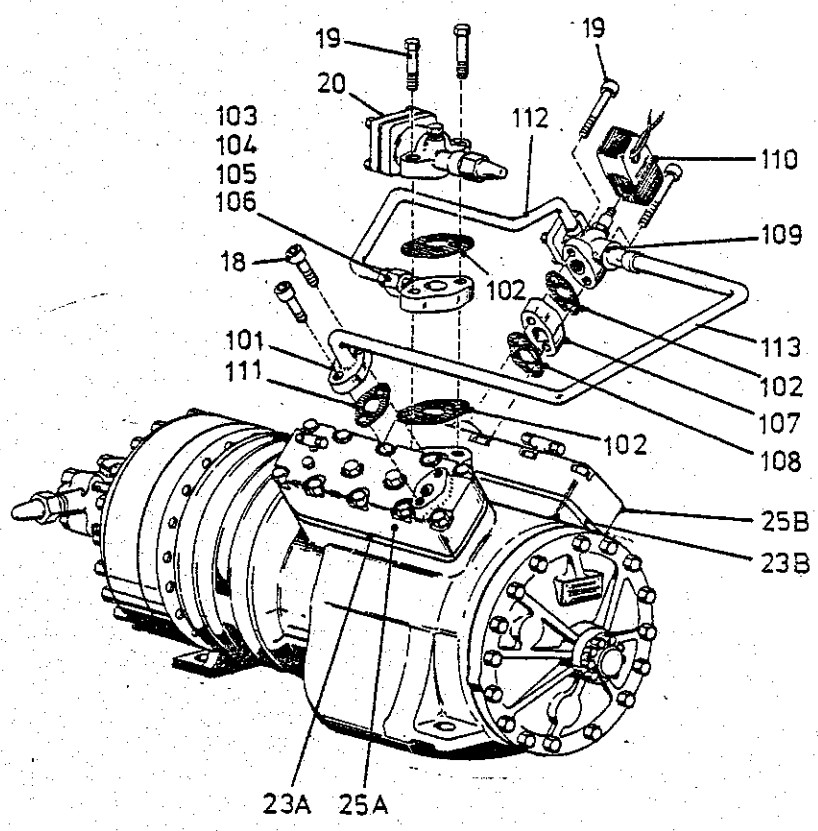

NOTE:
Right hand (RH) and Left hand (LH) is designated by viewing from motor end of compressor.

UNLOADER KIT ACCESSORIES FOR COMPRESSOR TYPE 77UPHP(Q)	
	A1318-B

SPARE PARTS LIST

EQUIPMENT :- COMPRESSOR TYPE 75UPH5(Q)

No. TS 6908

DRAWING No. K 333383

SPECIFICATION No. -

SHEET No. 4

ILLUSTRATED PLATE No. A.1318

No. OF SHEETS 4

ITEM No ON PLATE	QTY	DESCRIPTION		PART NUMBER
		THE FOLLOWING ITEMS COMPRISE SPARES FOR THE UNLOADER ASSEMBLY		
101	1	Flange	(D-B FLG8)	707270
102	3	*Gasket	(D-B 908-002-026)	707230
103	1	Adaptor Block	(D-B ADP64)	707272
104	1	Adaptor Fitting	(D-B ADP71)	707273
105	1	*Gasket	(D-B GA430)	707274
106	1	Adaptor Fitting	(D-B ADP77)	707275
107	1	Adaptor Fitting	(D-B ADP66)	707276
108	1	*Gasket	(D-B GKT159)	707277
109	1	Valve (less Coil)	(D-B VAL357)	707278
110	1	*Coil	(D-B COL117T4)	708076
111	1	*Gasket	(D-B 908-002-024)	707280
112	1	Tubing (Discharge)	(D-B TUB2061)	707281
113	1	Tubing (Suction)	(D-B TUB2062)	707282

* RECOMMENDED SPARES

NOTE: STANDARD FINISH ON FASTENERS FERROUS, CADMIUM PLATED & PASSIVATED NON FERROUS, ELECTRO-TINNED

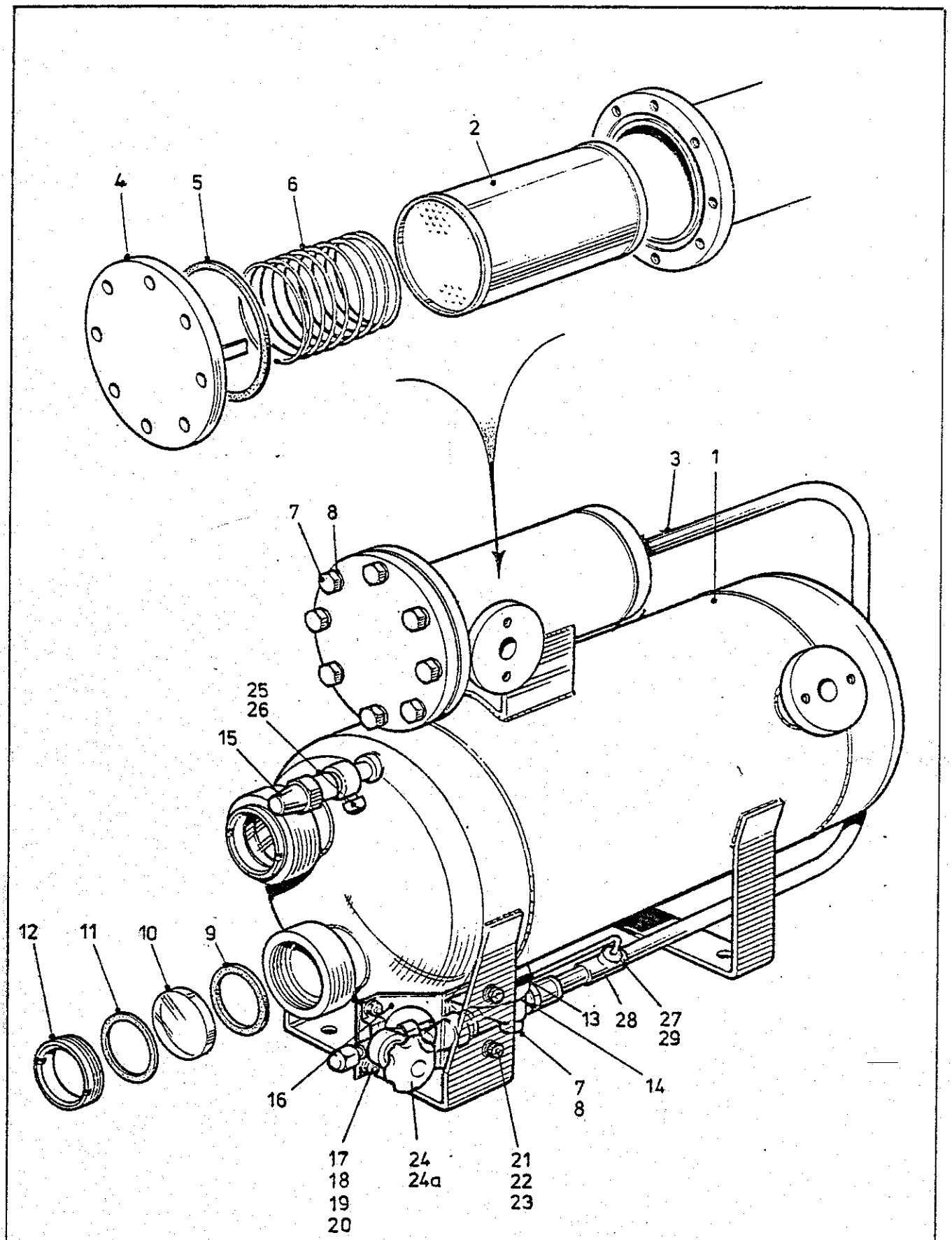

LIQUID RECEIVER AND FILTER ASSY.	
	A1371

SPARE PARTS LIST

EQUIPMENT :- LIQUID RECEIVER ASSEMBLY

No. TS 6909

DRAWING No. Y 333362

SPECIFICATION No. -

SHEET No. 1

ILLUSTRATED PLATE No. A. 1371

No. OF SHEETS 2

ITEM No ON PLATE	QTY	DESCRIPTION	PART NUMBER
		Complete Liquid Receiver Assembly	333362
1	1	Welded Body	333365
2	1	* Dehydrator Cartridge	120465
		(Silicagel to drawing X 055988)	
3	0.9 M	5/8" O.D. x 18 SWG Copper Tube (BS 2017)	807807
4	1	Cover	911760
5	1	* Gasket	120547
6	1	Spring	120562
7	10	Screw, M8 x 25 mm long Steel Hex Hd.	-
8	10	Spring Washer, M8 Steel (BS 4464)	-
9	2	* Washer (Carrier 5H40-1011/1)	124884
10	2	* Sight Glass (Carrier 5H40-1001/A)	124879
11	2	Fibre Washer	120130
12	2	Gland	159915
13	1	Gasket (Asbestos Base)	123787
14	1	* Stop Valve (Mueller A16309)	120616
15	1	* Purge Valve (Mueller A 11031)	120271
16	1	Valve Bracket	333962
17	2	Screw, M5 x 16 mm long Steel Hex Hd.	-
18	2	Plain Washer, M5 Steel	-
19	2	Grover Washer, M5 Steel	-
20	2	Full Nut, M5 Steel	-
21	2	Screw, M6 x 20 mm long Steel Hex Hd.	-
22	2	Grover Washer, M6 Steel	-
23	2	Plain Washer, M6 Steel	-
24	1	* Shut-Off Valve (Danfoss BML6-Code 9G0101)	142947
24a	2	* Back-up Diaphragm (Danfoss 9G0305)	704934
	1	* Diaphragm and Seat (Danfoss 9G0003)	
25	2	* Copper Bonnet (Dean & Wood B1-4)	703077
26	1	1/4" Flare Nut (Danfoss 11L1101)	172285
27	0.3 M	1¼" O.D. x 20 SWG Copper Tube (BS 2017)	807920

* RECOMMENDED SPARES

NOTE: STANDARD FINISH ON FASTENERS FERROUS, CADMIUM PLATED & PASSIVATED NON FERROUS, ELECTRO-TINNED

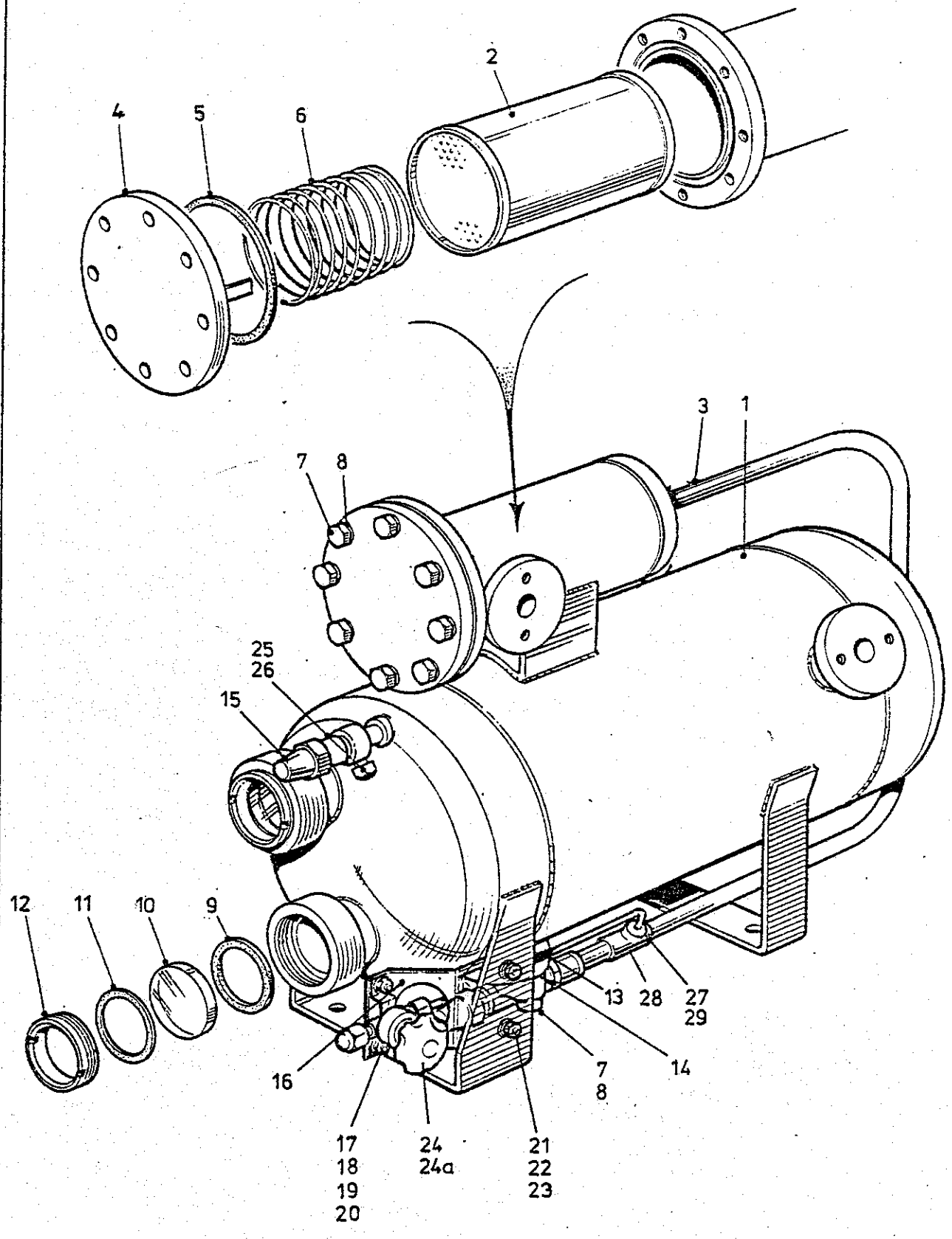

LIQUID RECEIVER AND FILTER ASSY.

A1371

SPARE PARTS LIST

EQUIPMENT :- LIQUID RECEIVER ASSEMBLY

No. TS 6909

DRAWING No. Y 333362

SPECIFICATION No. -

SHEET No. 2

ILLUSTRATED PLATE No. A.1371

No. OF SHEETS 2

ITEM No ON PLATE	QTY	DESCRIPTION	PART NUMBER
28	1	Tee 5/8" x 5/8" x 3/8" (Nibco 611)	707443
29	1	Reducer 3/8" x 1/4" (Nibco 600-2)	707444

* RECOMMENDED SPARES

NOTE: STANDARD FINISH ON FASTENERS
FERROUS, CADMIUM PLATED & PASSIVATED
NON FERROUS, ELECTRO-TINNED

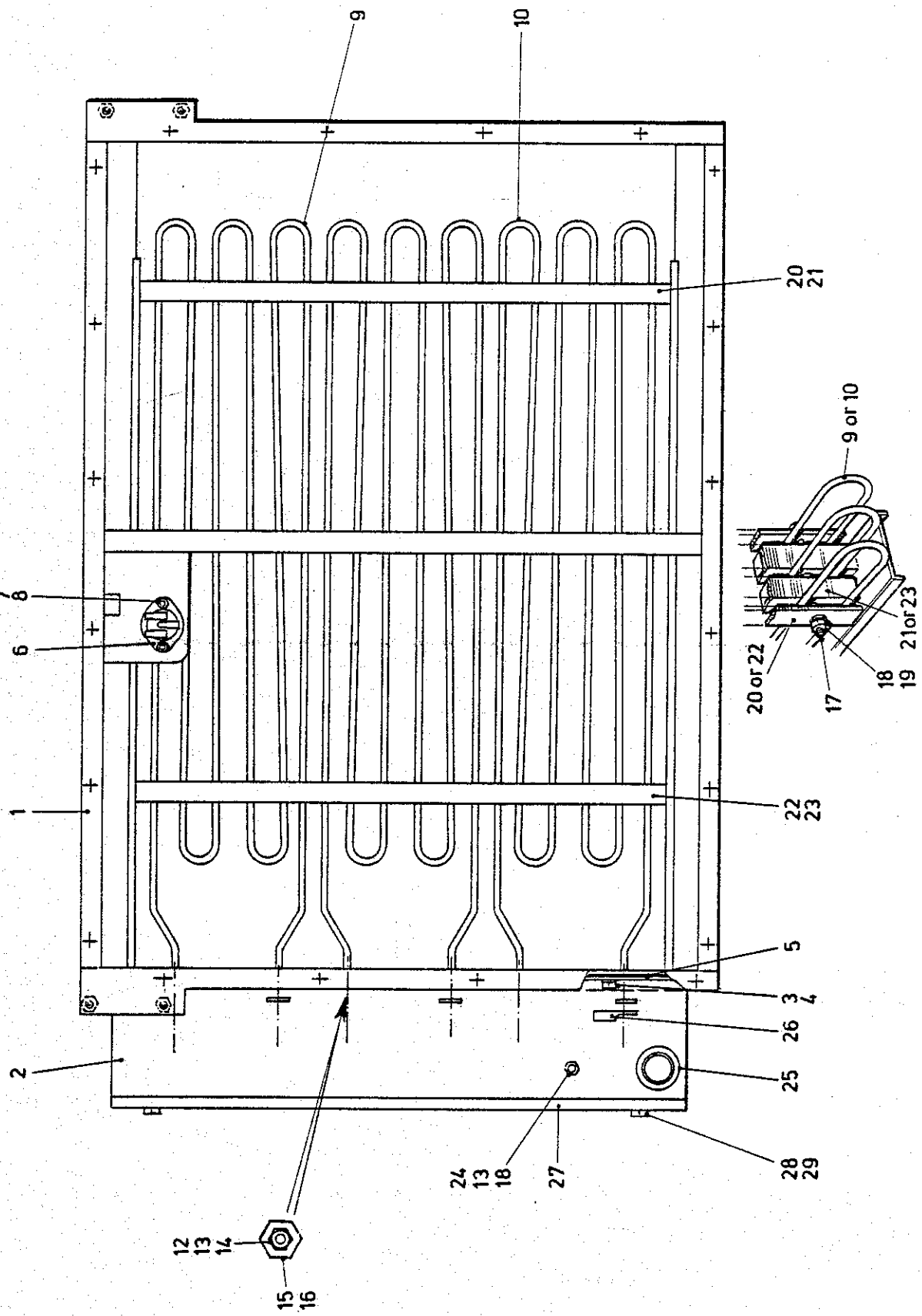

24 kw 380v HEATER

A1372

SPARE PARTS LIST

EQUIPMENT :- HEATER ASSEMBLY, 24 KW 380 V

No. TS 6910

DRAWING No. J 333291

SPECIFICATION No. -

SHEET No. 1

ILLUSTRATED PLATE No. A. 1372

No. OF SHEETS 2

ITEM No ON PLATE	QTY	DESCRIPTION	PART NUMBER
		Complete Heater Unit (Redring Electric Drg 586-1078-01)	333291
1	1	Heater Frame (Redring Electric Drg 586-2186-01)	705932
2	1	Terminal Box (Redring Electric Drg 586-2187-01)	705933
3	6	Screw, M8 x 15 mm long Steel Slotted Hex Hd (Nickel plated)	-
4	6	Shakeproof Washer, M8 Steel	-
5	1	* Terminal Box Flange Gasket (Redring Electric Drg 586-2190-01)	705936
6	1	* Thermostat (Salford Industrial Instruments Klixon 20400D/0404350/30)	707330
7	2	Screw, M3 x 6 mm long Steel Cheese Hd.	-
8	2	Shakeproof Washer, M3 Steel	-
9	6	* Element (Redring Electric Drg 586-1079-02)	707327
10	3	* Element (Redring Electric Drg 586-1079-01)	707328
11	3	Busbar (Redring Electric Drg 586-2195-01)	707326
12	36	Plain Washer, M6 Brass	-
13	37	Spring Washer, M6 Phosphor Bronze	-
14	36	Locknut, M6 Brass	-
15	18	Shakeproof Washer, 3/8" BSP	-
16	18	Locknut, 3/8" BSP	-
17	12	Stud (Redring Electric Drg 5011-36-005)	707331
18	25	Full nut, M6 Steel	-
19	24	Shakeproof Washer, M6 Steel	-
20	2	Element Clamp Strip (Redring Electric Drg 586-2192-01)	705938
21	2	Element Clamp (Redring Electric Drg 586-2191-01)	705937

* RECOMMENDED SPARES

NOTE: STANDARD FINISH ON FASTENERS FERROUS, CADMIUM PLATED & PASSIVATED NON FERROUS, ELECTRO-TINNED

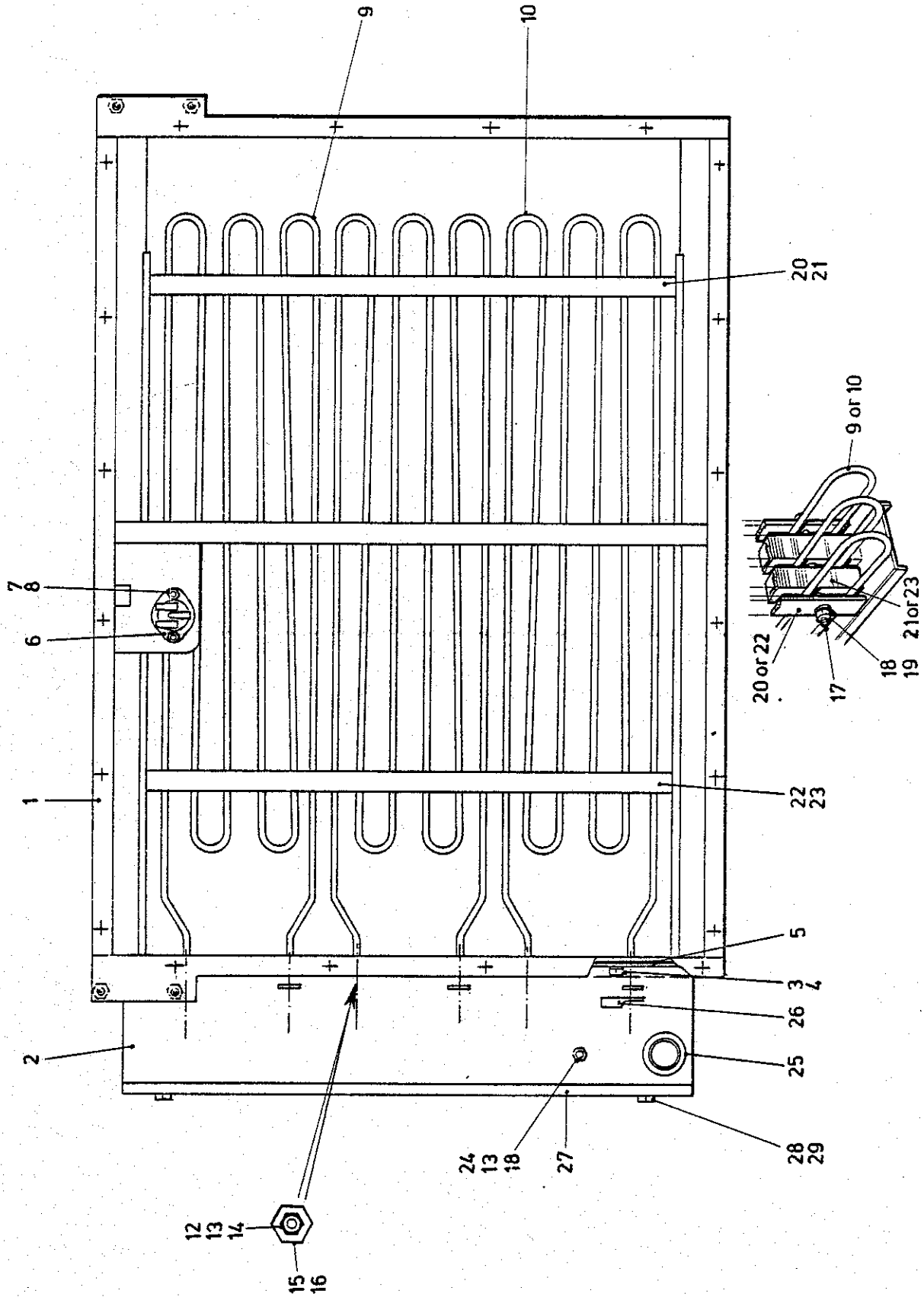

24 kw 380v HEATER

A1372

SPARE PARTS LIST

EQUIPMENT :- HEATER ASSEMBLY, 24 KW 380 V

No. TS 6910

DRAWING No. J 333291

SPECIFICATION No. -

SHEET No. 2

ILLUSTRATED PLATE No. A.1372

No. OF SHEETS 2

ITEM No ON PLATE	QTY	DESCRIPTION	PART NUMBER
22	2	Element Clamp Strip (Redring Electric Drg 586-2194-01)	705940
23	2	Element Clamp (Redring Electric Drg 586-2193-01)	705939
24	1	Klingerite Washer (Redring Electric Drg 5025-77-036)	707329
25	1	Flanged Conduit Coupling, 32 mm (Walsall Conduits F1660-32 mm)	707971
26	14	Ring Terminal (Redring Electric Drg 5047-07-009)	707332
27	1	Terminal Box Cover (Redring Electric Drg 586-1078-01 items 5,6,19-21,30 & 34)	705934
27a	1	* Terminal Box Cover Gasket (Redring Electric Drg 586-2189-01)	705935
28	8	Shakeproof Washer, M5 Steel	-
29	8	Screw, M5 x 10 mm long Steel Slotted Hex Hd	-

* RECOMMENDED SPARES

NOTE: STANDARD FINISH ON FASTENERS FERROUS, CADMIUM PLATED & PASSIVATED NON FERROUS, ELECTRO-TINNED

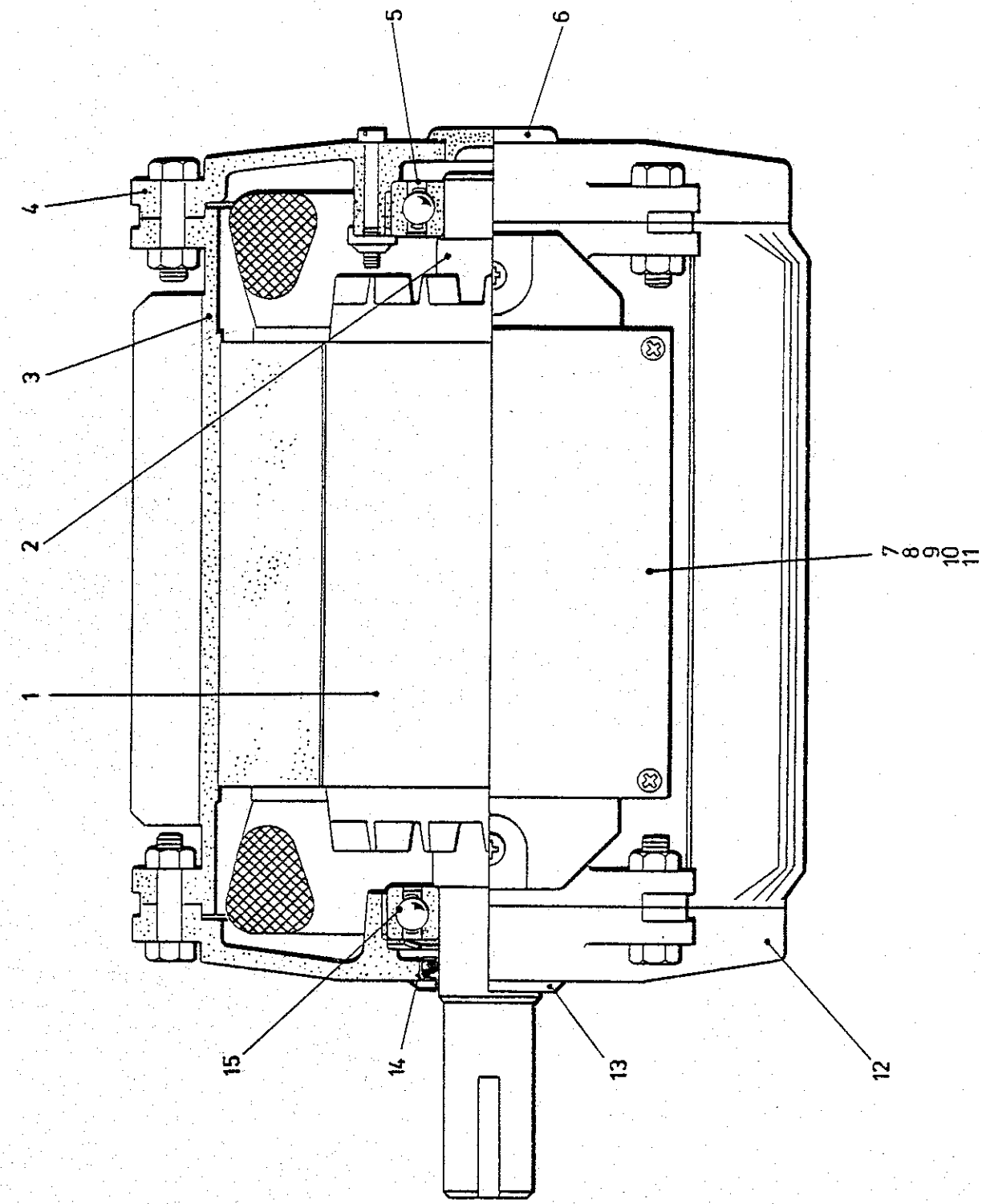

PAD MOUNTED INDUCTION MOTOR
GEC FRAME SIZE 80-180M (IP56)

A1294

SPARE PARTS LIST

EQUIPMENT :- CONDENSER FAN MOTOR, D1OOL PAD MOUNTED

No. TS 6922

DRAWING No. R 333402

SPECIFICATION No. -

SHEET No. 1

ILLUSTRATED PLATE No. A1294

No. OF SHEETS 1

ITEM No ON PLATE	QTY	DESCRIPTION	PART NUMBER
		Complete Motor	333402
1	1	Shaft and Rotor Assembly	707347
2	1	Shaft only	707348
3	1	* Wound Stator Frame	707349
4	1	N.D. Endshield (GEC 617 2305 45 21 11)	707350
5	1	* Set of Bearings (Pair of 6206 Z)	701350
6	1	Endshield Plug	707358
7	1	Terminal Box (GEC 617 8658 9051 11)	707354
8	1	Terminal Box Lid (GEC 617 8658 9012 11)	707355
9	1	Terminal Block (GEC 617 8690 1037)	707816
10	1	* Gasket (Lid/Box)	707356
11	1	* Gasket (Box/Frame)	707357
12	1	D. Endshield (GEC 617 2305 4321 11)	707351
13	1	* Outer Face Seal (GEC 617 8911 1001 03)	707352
14	1	* Inner Oil Seal (GEC 2912 6019 124)	707353
15	-	see item 5	-

* RECOMMENDED SPARES

NOTE: STANDARD FINISH ON FASTENERS
FERROUS, CADMIUM PLATED & PASSIVATED
NON FERROUS, ELECTRO-TINNED

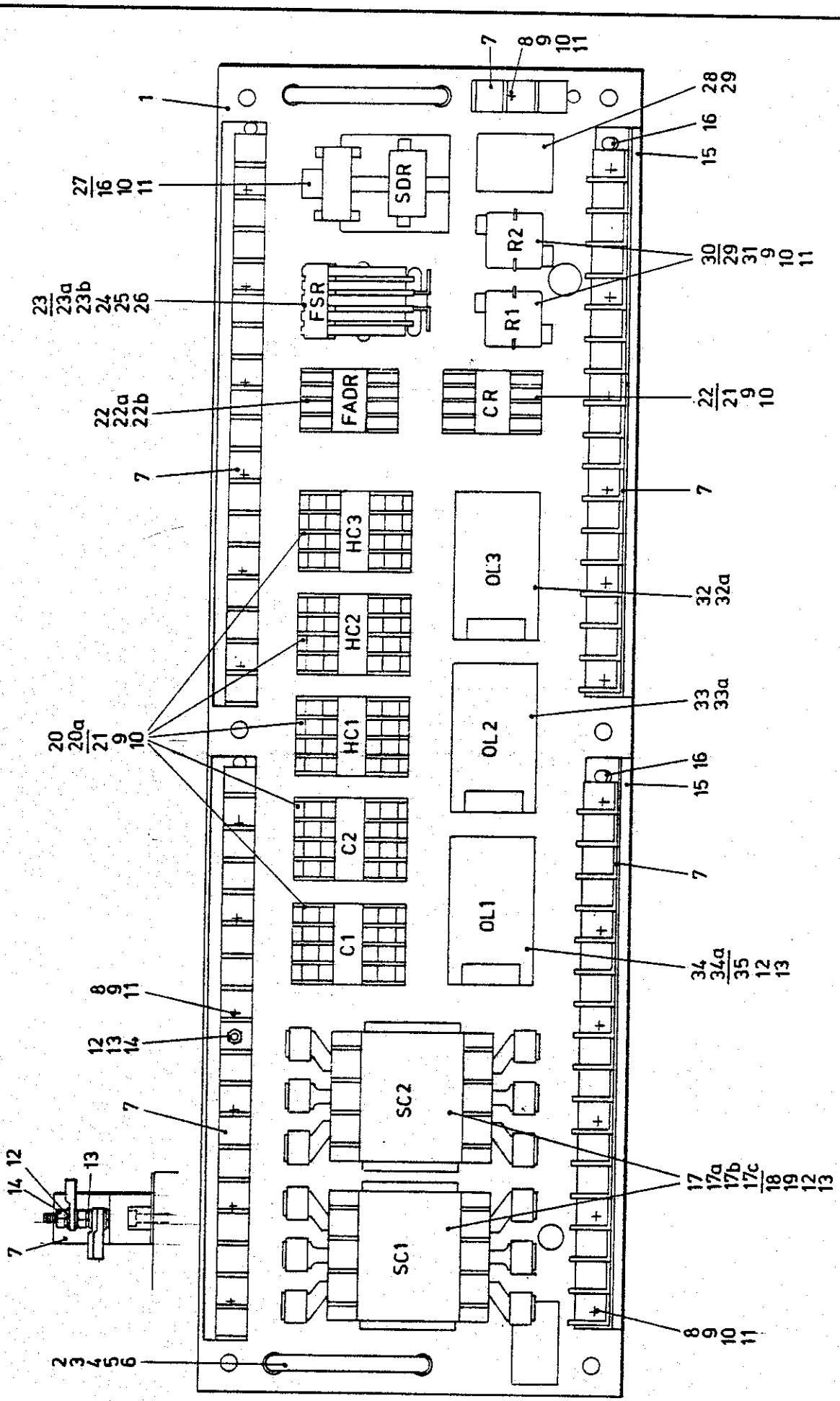

CONTROL PANEL

A1373

SPARE PARTS LIST

EQUIPMENT :- CONTROL PANEL

No. TS 6911

DRAWING No. J 333341

SPECIFICATION No. T 7328

SHEET No. 1

ILLUSTRATED PLATE No. A. 1373

No. OF SHEETS 2

ITEM No ON PLATE	QTY	DESCRIPTION	PART NUMBER
		Complete Panel (T 7328)	333341
1	1	Drilled Panel	333473
2	2	Handle (Imhof-Bedco 178K-HAN-046PL)	172746
3	2	Handle Shoe (Imhof-Bedco 178T-SHE001XA)	172747
4	4	Screw, M6 x 25 mm long Steel Cheese Hd	-
5	4	Plain Washer, M6 Steel	-
6	4	Grover Washer, M6 Steel	-
7	73	Terminal Block (Termate TBA5,M5 Black)	707825
8	31	Screw, M4 x 35 mm long Steel Cheese Hd.	-
9	60	Plain Washer, M4 Steel	-
10	60	Grover Washer, M4 Steel	-
11	31	Full Nut, M4 Steel	-
12	310	Plain Washer, M5 Steel	-
13	160	Grover Washer, M5 Steel	-
14	140	Full Nut, M5 Steel	-
15	2	Terminal Block Packing Piece	333477
16	20	Screw, M4 x 16 mm long Steel Cheese Hd	-
17	2	* Contactor (T 7322, SC1-SC2) (M.T.E. Type AXC3 Ref 01/332/50/240 with 2 Auxiliary Contacts 01/51/20)	707629
17a	2	* Coil (05/3350/240)	705927
17b	2	* Main Contact Kit (01/033999/030)	705928
17c	4	* Auxiliary Contact (01/51/20)	705929
18	1	Mechanical Interlock (MTE 01/033999/016)	707630
19	8	Screw, M5 x 25 mm long Steel Cheese Hd.	-
20	5	* Contactor (T7323,C1,C2,HC1,HC2,HC3) (M.T.E. Type AXC1 Ref 01/0313/50/240)	707631
20a	5	* Coil (05/3150/240)	705926
21	14	Screw, M4 x 25 mm long Steel Cheese Hd.	-
22	2	* Relay (T 7324, FADR,CR) (M.T.E. Type AXCR Ref 01/0420/50/240)	707633

* RECOMMENDED SPARES

NOTE: STANDARD FINISH ON FASTENERS FERROUS, CADMIUM PLATED & PASSIVATED NON FERROUS, ELECTRO-TINNED

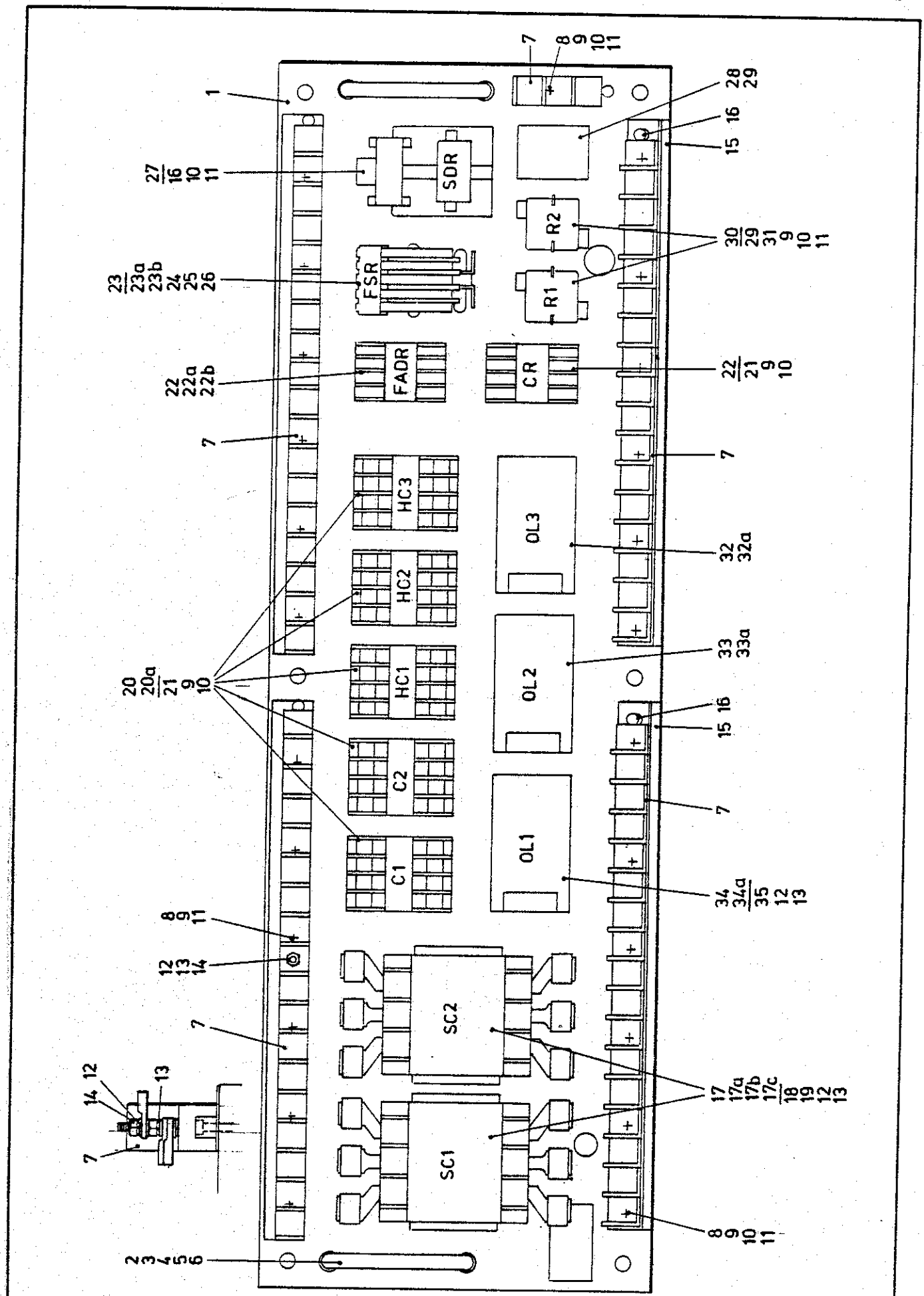

CONTROL PANEL

A1373

SPARE PARTS LIST

EQUIPMENT :- CONTROL PANEL

No. TS 6911

DRAWING No. J 333341

SPECIFICATION No. T 7328

SHEET No. 2

ILLUSTRATED PLATE No. A1373

No. OF SHEETS 2

ITEM No ON PLATE	QTY	DESCRIPTION	PART NUMBER
22a	2	* Coil (05/3050/240)	705930
22b	2	* Contact Pack (01/0408/00/000)	705931
23	1	* Current Relay (T 7326, FSR) 26853111.4	707635
		(E.N. Bray Type AC 8Z)	
23a	1	* Coil (E.N. Bray 8Z-380 V 3 ph 50 Hz)	707315
23b	1	* Contact Pack (E.N. Bray E19065)	707324
24	4	Screw, M3 x 16 mm long Steel Cheese Hd.	-
25	4	Plain Washer, M3 Steel	-
26	4	Grover Washer, M3 Steel	-
27	1	* Timing Relay (T4861 - SDR)	905423
		(Square D type AO-1E, 220 V 50 Hz)	
		(See Spare Parts List No TS 6920, page 39)	
28	1	Relay Cover Plate	333716
29	6	Screw, M4 x 30 mm long Steel Cheese Hd.	-
30	2	* Relay (T 7325 - R1, R2)	707958
31		(Pye 63002346361)	
31	2	Baseplate (Pye 9291709)	707959
32	1	* Overload Relay (T 5856 - OL3)	701704
		(MTE Type UOL1/3 Ref 01/156/0 with 3 heaters)	
32a	1	* Set of 3 heaters (MTE 01/153/9)	171675
33	1	* Overload Relay (T 7327 - OL2)	707632
		(MTE Type UOL1/3 Ref 01/156/0 with 3 heaters)	
33a	1	* Set of 3 heaters (MTE 01/153/12)	157138
34	1	* Overload Relay (T 4410 - OL1)	905406
		(MTE Type UOL1/3 Ref 01/156/0 with 3 heaters)	
34a		* Set of 3 heaters (MTE 01/153/8)	173033
35	6	Screw, M5 x 16 mm long Steel Cheese Hd.	-

* RECOMMENDED SPARES

NOTE: STANDARD FINISH ON FASTENERS
FERROUS, CADMIUM PLATED & PASSIVATED
NON FERROUS, ELECTRO-TINNED

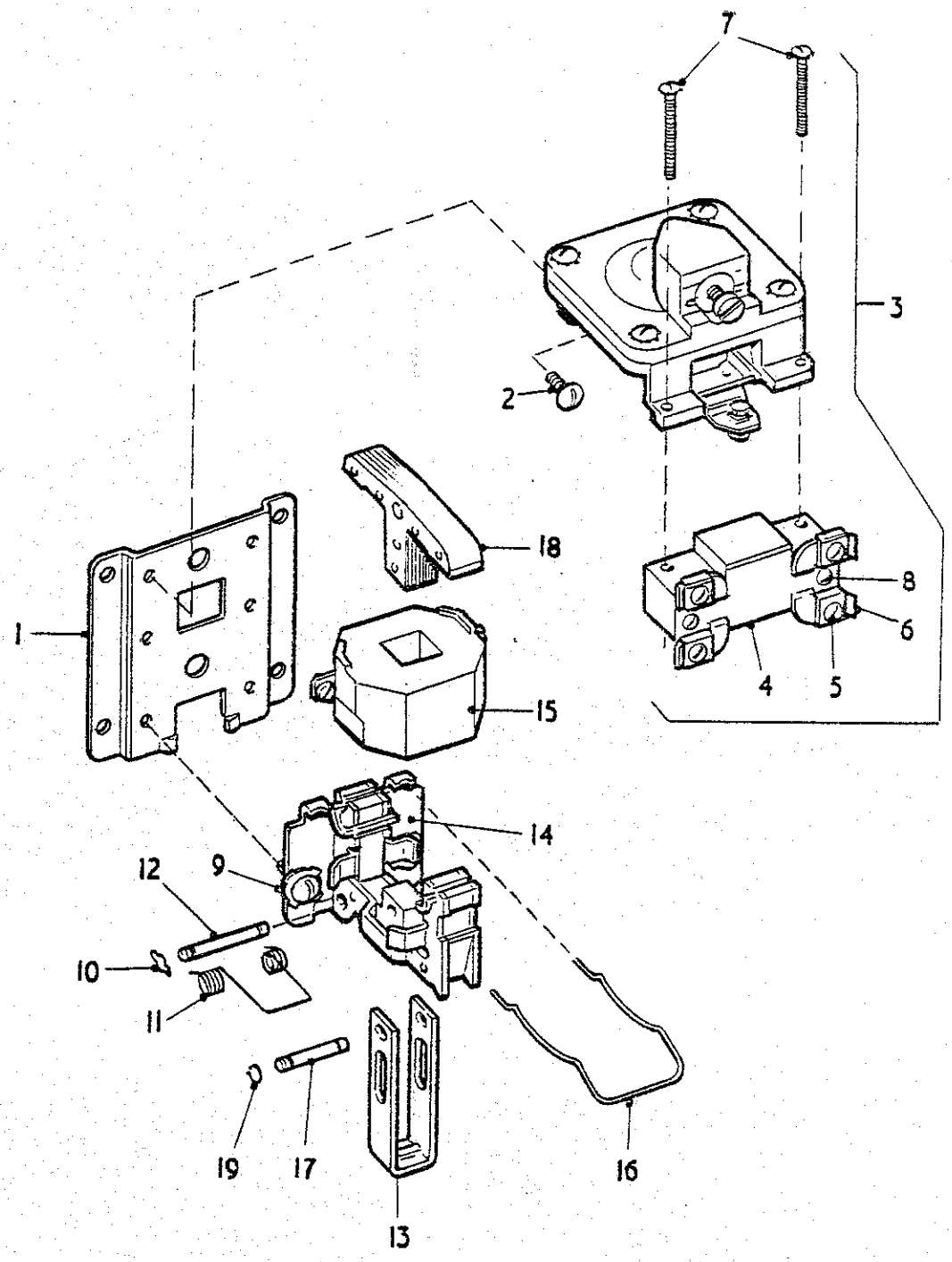

PNEUMATIC TIMING RELAY TYPE AO-1E	
	A 910

SPARE PARTS LIST

EQUIPMENT :- PNEUMATIC TIMING RELAY SQUARE D CLASS 9050 TYPE AO-IE No. TS 6920

DRAWING No. -

SPECIFICATION No. T 4861

SHEET No. 1

ILLUSTRATED PLATE No. A. 910

No. OF SHEETS 1

ITEM No ON PLATE	QTY	DESCRIPTION	PART NUMBER
		Timing Relay (Spec T 4861)	905423
1	1	Baseplate (Sq. D 4373-D1-X1)	707333
2	2	Screw, No. 10-24TP1 x 7/16" long (Sq. D 1902 W 16141)	-
3	1	* Pneumatic Timing Unit (inc. items 4,7) (Sq. D 4373-S10-G1)	700618
4	1	Snap switch (includes item 5,6,8) (Sq. D. Class 9007 Type BO-1)	700620
5	4	Screws, No 6-32TPI x 1/4" long (Sq. D 1904 W 12081)	707334
6	4	Terminal Clip (Sq. D 2183-X34)	-
7	2	Screw No 6-32TPI x 7/8" long (Sq D 1902W12281)	-
8	2	Screw (Sq. D 1012W312)	-
9	2	Screw, No 10-24 TP1 x 5/16" long (Sq D 214-D19-G1)	
10	2=	Nylon Retainer (Sq D 2935-X7)	707335
11	1	* Return Spring (Sq. D 4373-D6-X1)	700617
12	1	Retaining Pin (Sq. D 4373-D4-X1)	707336
13	1	Yoke (Sq. D 4373-D2-X1)	707337
14	1	Magnet Frame (Sq. D. 4373-C2-G1)	707338
15	1	* Magnet Coil (Sq. D 2959-S1-W36A)	700616
16	1	Spring Clip (Sq. D 4373-D5-X1)	707339
17	1	Armature Pivot (Sq. D 4373-D3-X1)	707340
18	1	Armature (Sq. D 4373-C1-G1)	707341
19	2	Plastic Ring (Sq D 29212-00600)	707342

* RECOMMENDED SPARES

NOTE: STANDARD FINISH ON FASTENERS FERROUS, CADMIUM PLATED & PASSIVATED NON FERROUS, ELECTRO-TINNED

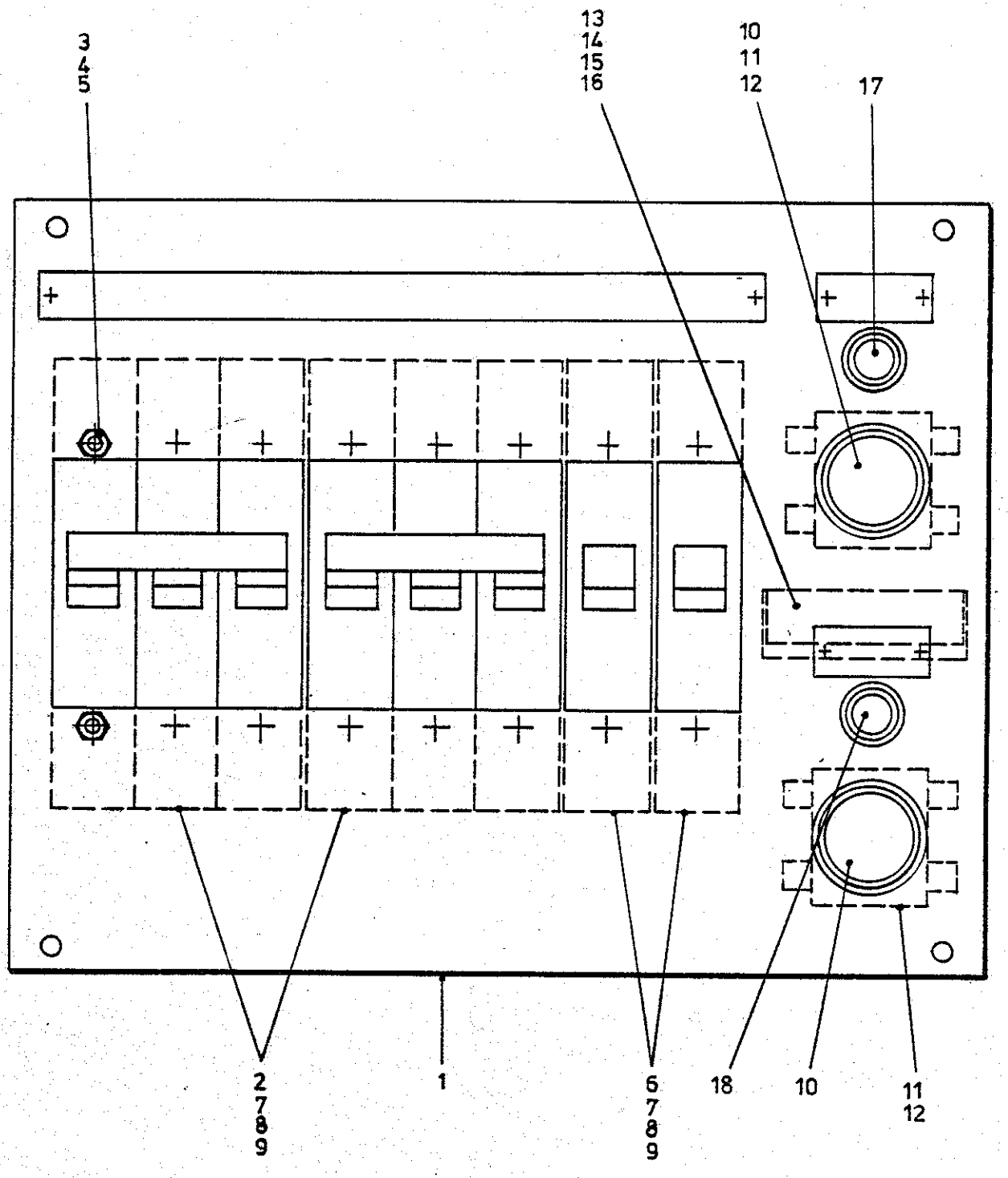

CIRCUIT BREAKER PANEL

A1374

SPARE PARTS LIST

EQUIPMENT :- CIRCUIT BREAKER PANEL

No. TS 6912

DRAWING No. R 333342

SPECIFICATION No. -

SHEET No. 1

ILLUSTRATED PLATE No. A1374

No. OF SHEETS 1

ITEM No ON PLATE	QTY	DESCRIPTION	PART NUMBER
		Complete Panel	333342
1	1	Drilled Panel	333750
2	2	* Circuit Breaker (T 7320 - MCB1, MCB2) (Ottermill BRP3040)	707627
3	16	Grover Washer, 4BA Spring Steel	-
4	16	Plain Washer, 4BA Steel	-
5	16	Full Nut, 4BA Steel	-
6	2	* Circuit Breaker (T7321-MCB3,MCB4) (Ottermill BRP1005)	707628
7	32	Grover Washer, M6 Spring Steel	-
8	80	Plain Washer, M6 Steel	-
9	48	Full Nut, M6 Steel	-
10	2	Push Button (TB1,TB2) (Square D Class 9001, Type TR51)	707700
11	2	* Contact Block (Square D Class 9001, Type TB)	707701
12	2	* Contact Block (Square D Class 9001, Type TF)	707702
13	1	Terminal Block (Bulgin Series 7200-4 way, Type 72104-M)	707776
14	2	Screw, M3 x 20 mm long Steel Cheese Hd.	-
15	2	Grover Washer, M3 Spring Steel	-
16	2	Plain Washer, M3 Steel	-
17	1	* Signal Lamp (TL1- Amber) (Arcoletric SL81C, 220 V, 50 Hz)	707703
18	1	* Signal Lamp (TL2-Green) (Arcoletric SL81C, 220 V, 50 Hz)	707704

* RECOMMENDED SPARES

NOTE: STANDARD FINISH ON FASTENERS FERROUS, CADMIUM PLATED & PASSIVATED NON FERROUS, ELECTRO-TINNED

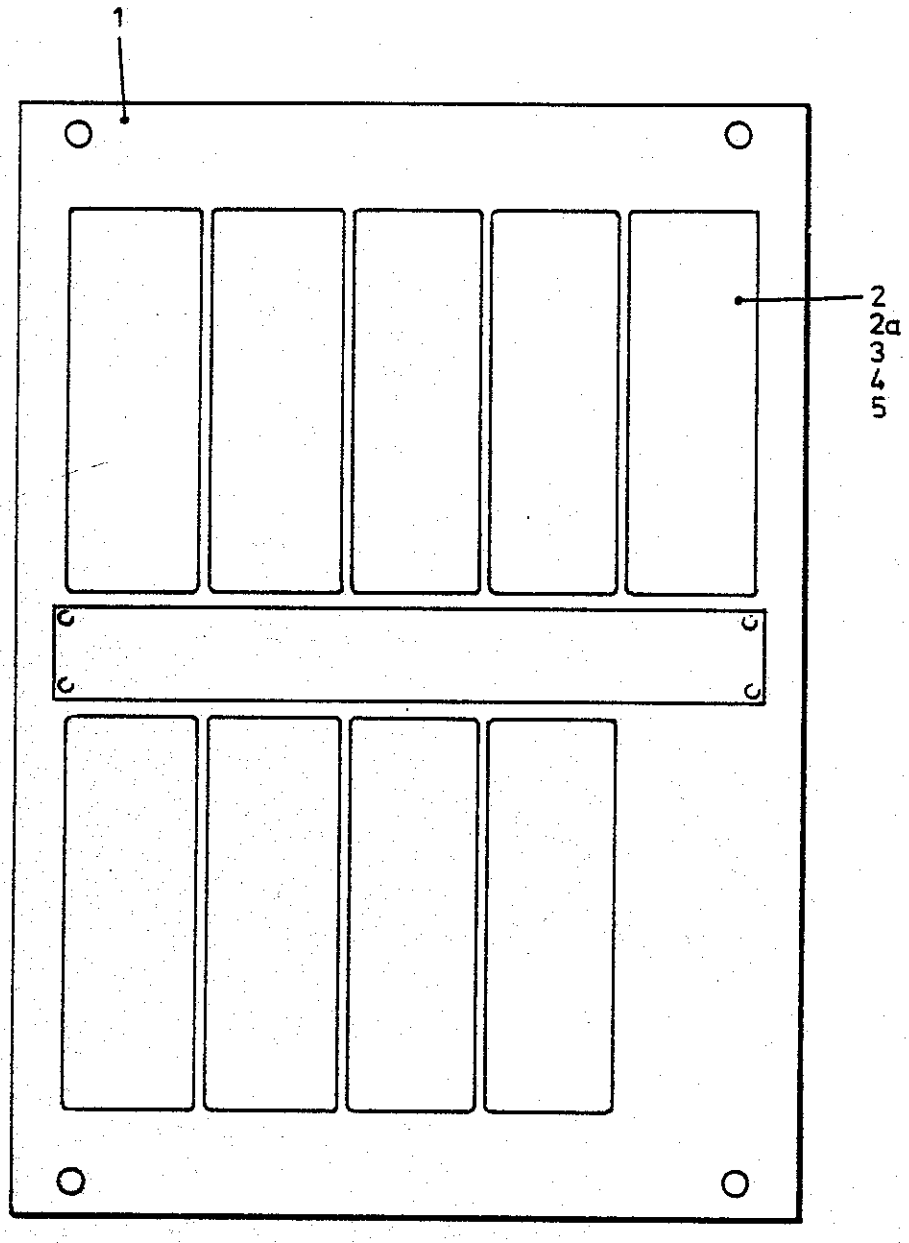

FUSE PANEL ASSEMBLY

A1375

SPARE PARTS LIST

EQUIPMENT :- FUSE PANEL

No. TS 6913

DRAWING No. R 333403

SPECIFICATION No. -

SHEET No. 1

ILLUSTRATED PLATE No. A.1375

No. OF SHEETS 1

ITEM No ON PLATE	QTY		DESCRIPTION	PART NUMBER
			Complete Panel Assembly	333403
1	1		Drilled Panel	333483
2	9	*	Fuse Holder (GEC Red Spot RS20P)	703238
2a	9	*	Fuse Link (GEC Type N1T20A)	707636
3	9		Screw, M5 x 16 mm long Steel Cheese Hd.	-
4	9		Plain Washer, M5 Steel	-
5	9		Grover Washer, M5 Spring Steel	-

* RECOMMENDED SPARES

NOTE: STANDARD FINISH ON FASTENERS
FERROUS, CADMIUM PLATED & PASSIVATED
NON FERROUS, ELECTRO-TINNED

8017 / 2

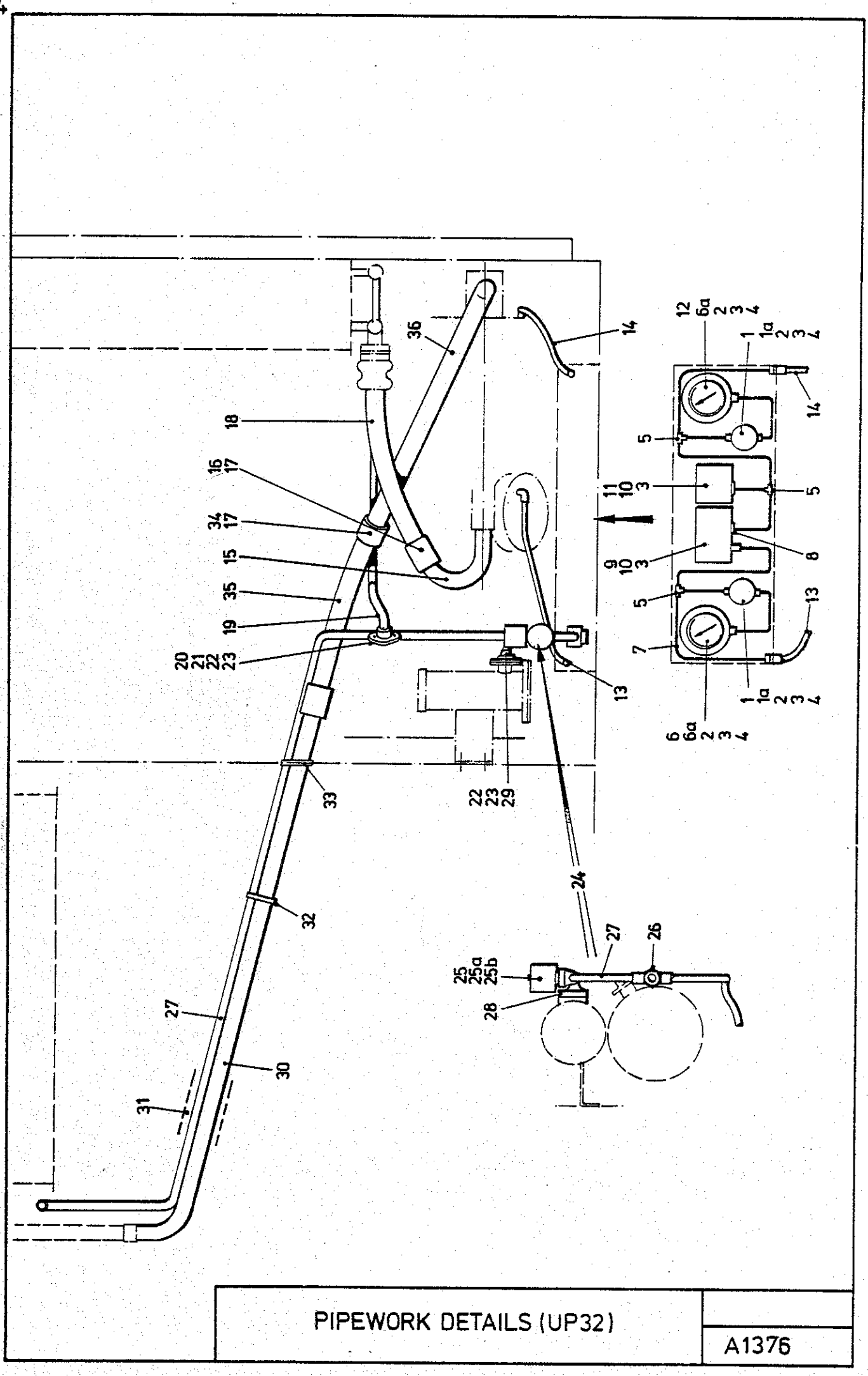

PIPEWORK DETAILS (UP32)

A1376

SPARE PARTS LIST

EQUIPMENT :- PIPEWORK DETAILS (UP32) No. TS 6914

DRAWING No. Z 333635

SPECIFICATION No. - SHEET No. 1

ILLUSTRATED PLATE No. A.1376 No. OF SHEETS 2

ITEM No ON PLATE	QTY	DESCRIPTION	PART NUMBER
1	2	* Shut Off Valve (Danfoss BML6, Code 9G0101)	142947
1a	2	* Back-up Diaphragm (Danfoss 9G 0305)	704934
	1	Diaphragm and Seat (Danfoss 9G 0003)	
2	10	Screw, M4 x 12 mm long Steel Cheese Hd.	-
3	14	Grover Washer, M4 Steel	-
4	10	Full Nut, M4 Steel	-
5	3	Tee (Nibco 611 - 1/4")	124496
6	1	* High Pressure Gauge (Budenberg to Drg SC 290V)	708439
6a	2	Glass (75 mm dia x 3 mm thick)	700596
7	1.5 M	Copper Tube 1/4" (20 SWG)	807920
8	7	Flare Nut 1/4" (Danfoss 11L1101)	172285
9	1	* Dual Pressure Cut-out Switch (Ranco 017-6705)	707725
10	4	Screw, M4 x 6 mm long Steel Hex Hd.	-
11	1	* Low Pressure Cut-out Switch (Ranco 016-6703)	705004
12	1	* Low Pressure Gauge (Budenberg to Drg SC 291V)	708440
13	1	* Flexible Connection	333671
14	1	* Flexible Connection	333670
15	1	Discharge Bend	333663
16	2	Twin Saddle Clamp Set (1" size)	334022
17	16	* Self Locking Nut (Aeroquip stiff nut 5/16" BSF)	160383
18	16"	* Flexible Hose (1") (Hiflex 1 wire braid Spec 112, pricked outer)	800043
19	1M	Copper Tube 7/8" (18 SWG)	807466

* RECOMMENDED SPARES

NOTE: STANDARD FINISH ON FASTENERS
FERROUS, CADMIUM PLATED & PASSIVATED
NON FERROUS, ELECTRO-TINNED

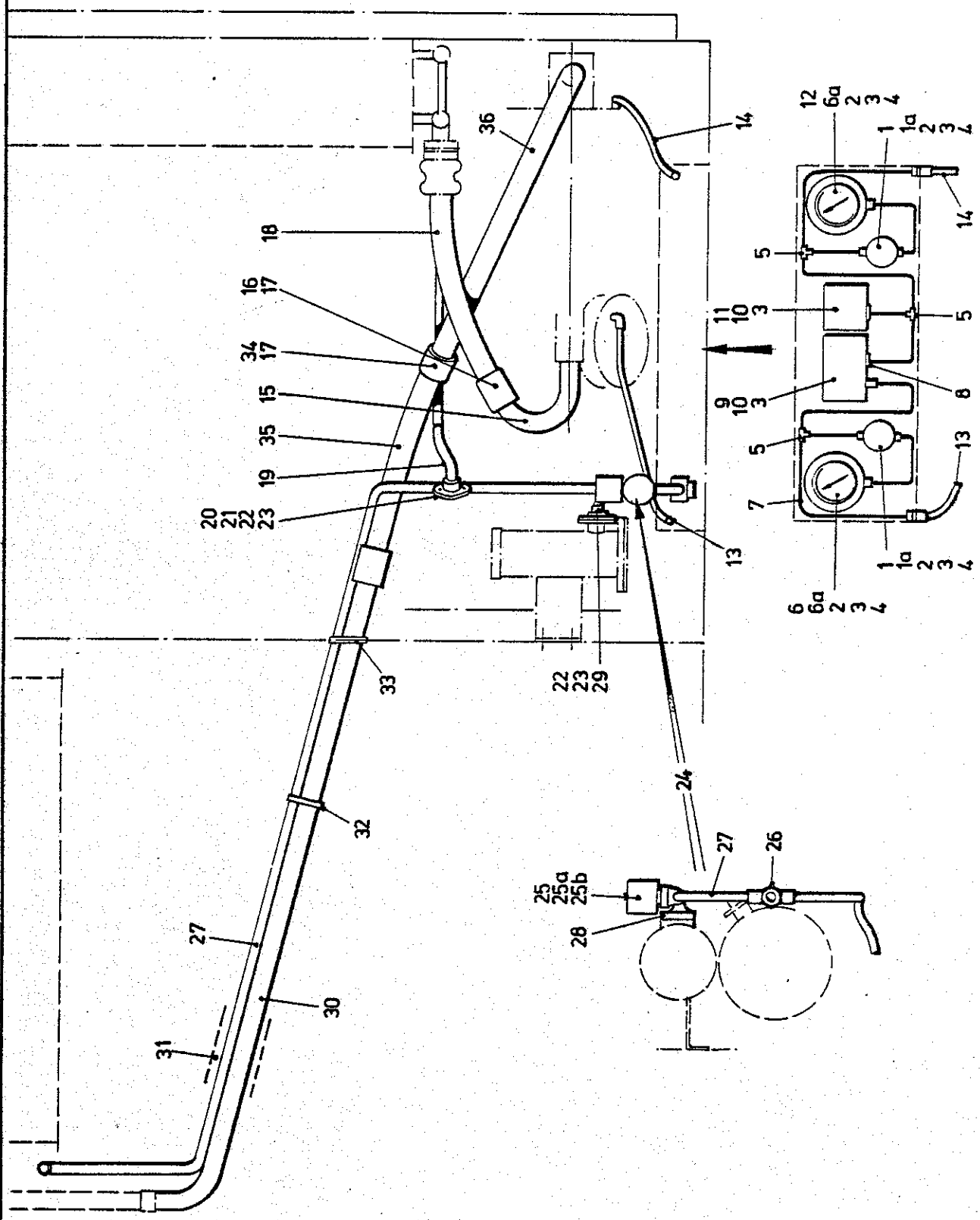

PIPEWORK DETAILS (UP32)

A1376

SPARE PARTS LIST

EQUIPMENT :- PIPEWORK DETAILS (UP32) No. TS_{6914}

DRAWING No. Z 333635

SPECIFICATION No. -

SHEET No. 2

ILLUSTRATED PLATE No. A.1376

No. OF SHEETS 2

ITEM No ON PLATE	QTY	DESCRIPTION	PART NUMBER
20	1	Flange	156821
21	1	* Gasket	123787
22	4	Screw, M8 x 30 mm long Steel Hex Hd	-
23	4	Grover Washer, M8 Steel	-
24	1	Sight Glass and Solenoid Assembly (items 25-28)	333669
25	1	* Liquid Line Solenoid Valve (Sporlan B14S2, 5/8" ODF, 220V 50 Hz)	158275
25a	1	* Coil (Sporlan MKC2-208-240/50-60)	700595
25b	1	* Internal Parts (Sporlan KS-B14)	700594
26	1	* Sight Glass (Sporlan SA-15-S)	702226
27	2.8M	Copper Tube, 5/8" (18 SWG)	807807
28	1	Flange	121408
29	1	* Gasket	320743
30	2M	Copper Tube, 1 3/8" (18 SWG)	805198
31	1.3M	Pipe Insulation (Armaflex No 13048 I/D 48 mm x 13 mm wall)	707939
32	6	Jubilee Clip, Size 2A	119955
33	0.2M	* Grommet (Permark Flexiform G51H-C)	143869
34	2	Twin Saddle Clamp Set (1 1/4")	334023
35	16"	* Flexible Hose (1 1/4") (Hiflex 1 wire braid Spec 112, pricked outer)	800046
36	1	Suction Bend	333664

* RECOMMENDED SPARES

NOTE: STANDARD FINISH ON FASTENERS FERROUS, CADMIUM PLATED & PASSIVATED NON FERROUS, ELECTRO-TINNED

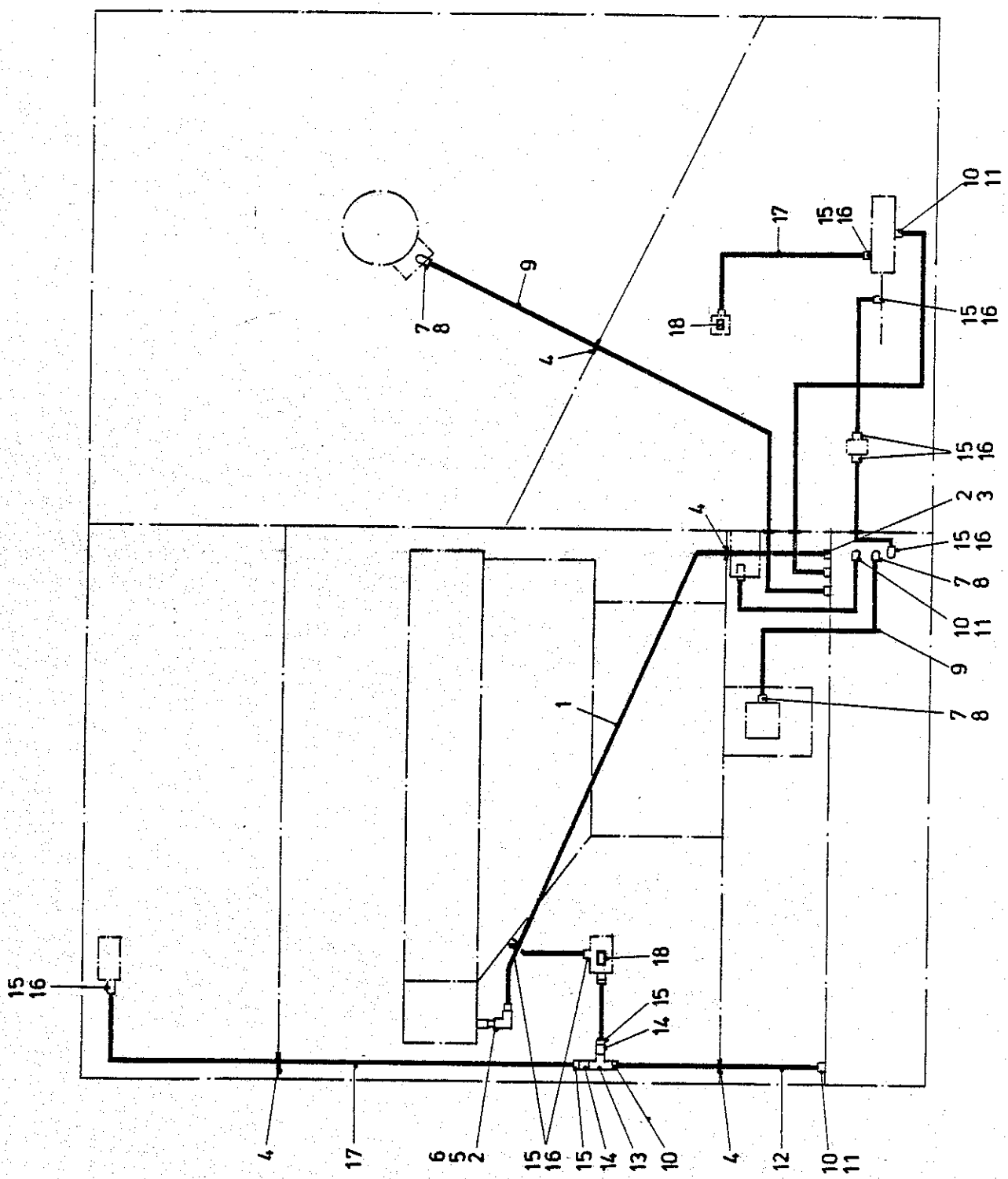

CONDUIT SCHEMATIC LAYOUT

A1377

SPARE PARTS LIST

EQUIPMENT :- ELECTRICAL CONNECTIONS (UP32) No. TS 6915

DRAWING No. K 333887

SPECIFICATION No. -

SHEET No. 1

ILLUSTRATED PLATE No. A. 1377

No. OF SHEETS 1

ITEM No ON PLATE	QTY	DESCRIPTION	PART NUMBER
1	2M	Flexible Conduit, 32 mm (Kopex LS2, PVC)	803227
2	2	Connector, 32 mm (Kopex C12)	705136
3	1	Locknut, 32 mm Conduit	702505
4	0.7 M	Grommet (Permark Flexiform G51 H-A)	140444
5	1	Elbow, 32 mm (Walsall Conduit F316)	707884
6	1	Nippling Piece, 32 mm (BS 4568)	700263
7	4	Connector, 20 mm (Kopex C12)	703465
8	4	Lock nut, 20 Conduit	701895
9	2.5 M	Flexible Conduit, 20 mm (Kopex LC2, PVC)	703532
10	6	Connector, 25 mm (Kopex C12)	703466
11	5	Lock nut, 25 mm Conduit	701894
12	4M	Flexible Conduit 25 mm (Kopex LS2, PVC)	810331
13	1	Conduit Inspection Tee, 25 mm	702710
14	2	Conduit Reducer 25 - 16 mm	702426
15	14	Connector, 16 mm (Kopex C12)	810332
16	12	Locknut, 16 mm Conduit	701896
17	6M	Flexible Conduit, 16 mm (Kopex LS2, PVC)	810330
18	2	Terminal Block	313838
		Cables	
		10M 84/0.3 EP/CSP BRB LAMA 7	802574
		25M 50/0.25 EP/CSP BRB LAMA 7	809020
		50M 30/0.25 EP/CSP BRB LAMA 7	803098
		2M 19/0.25 PTFE BS.G210 TYPE B BLACK	802675

* RECOMMENDED SPARES

NOTE: STANDARD FINISH ON FASTENERS
FERROUS, CADMIUM PLATED & PASSIVATED
NON FERROUS, ELECTRO-TINNED

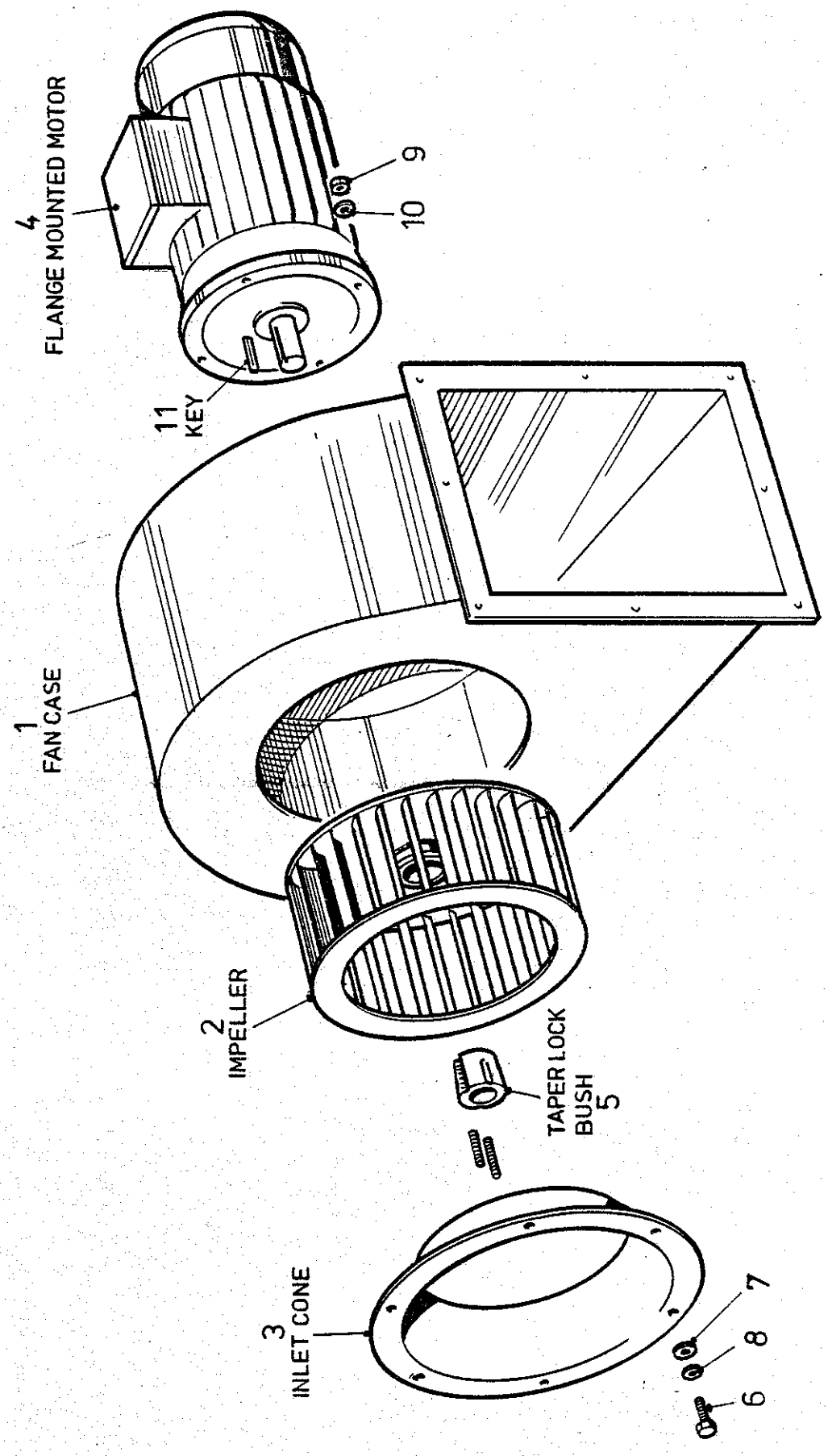

EVAPORATOR FAN AND MOTOR

A 1378

SPARE PARTS LIST

EQUIPMENT :- EVAPORATOR FAN AND MOTOR UNIT

No. TS 6916

DRAWING No. J 333343

SPECIFICATION No. -

SHEET No. 1

ILLUSTRATED PLATE No. A. 1378

No. OF SHEETS 1

ITEM No ON PLATE	QTY	DESCRIPTION	PART NUMBER
		Complete Fan and Motor Unit (Carter Howden A2/4720)	333343
1	1	Fan Case (Carter Howden A2/4721)	707343
2	1	* Impeller (Carter Howden A2/4722)	707344
3	1	Inlet Cone (Carter Howden A2/4723)	707345
4	1	* Fan Motor (GEC Spec 259, D90L)	333369
		(see Spare Parts List No TS 6923, page)	
5	1	Bush (Carter Howden 1210 bored 24 mm)	707346
6	6	Screw, M6 x 16 mm long Steel Hex Hd.	-
7	6	Plain Washer, M6 Steel	-
8	6	Single Coil Spring Washer, M6 Steel	-
9	4	Full Nut, M10 Steel	-
10	4	Plain Washer, M10 Steel	-
11	1	* Parallel Key, 8x7x50 mm long	-

* RECOMMENDED SPARES

NOTE: STANDARD FINISH ON FASTENERS FERROUS, CADMIUM PLATED & PASSIVATED NON FERROUS, ELECTRO-TINNED

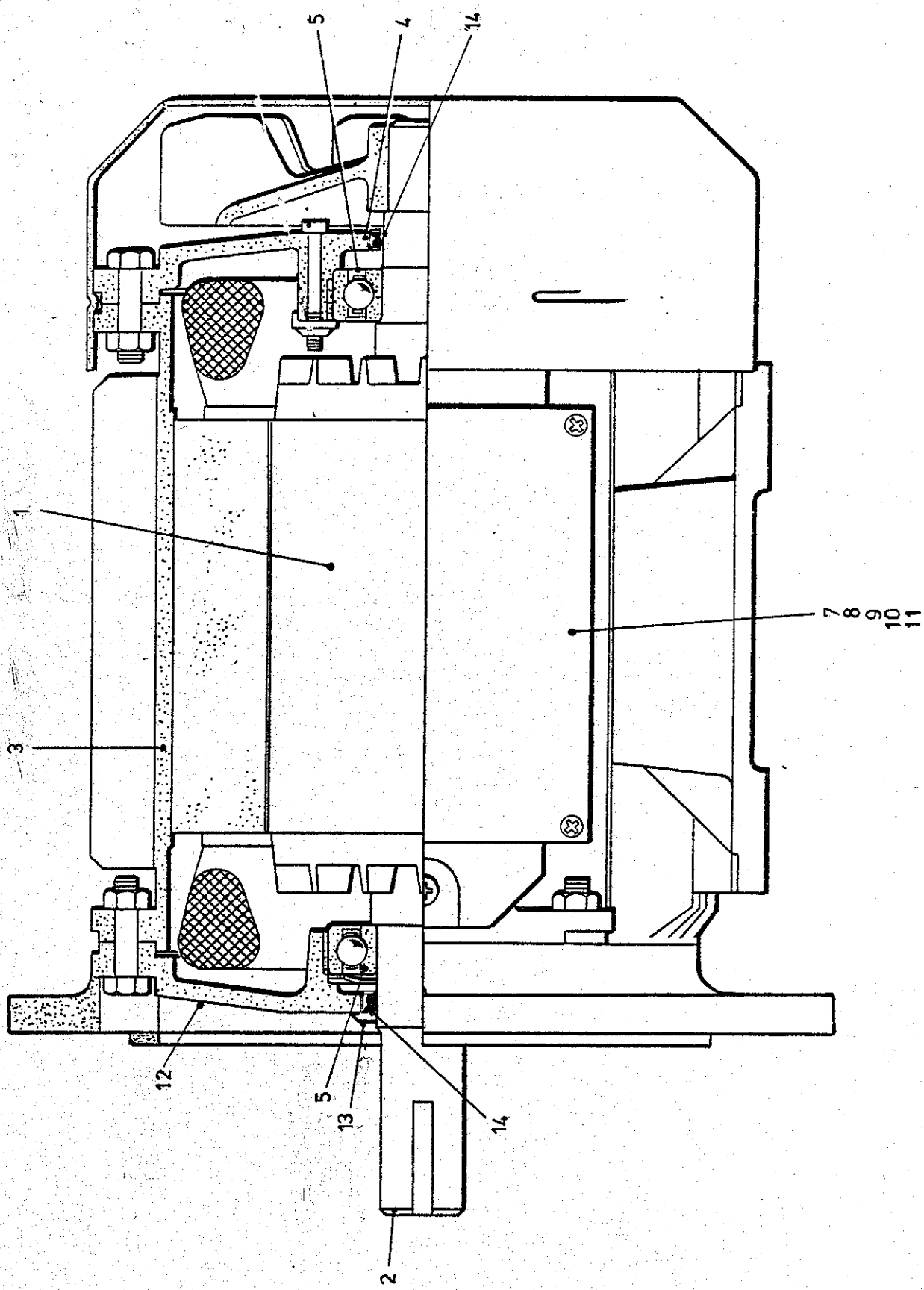

MOTOR TYPE 80 to 180 M (T.E.F.C)
(SPEC IP 54-55)

A 1370

SPARE PARTS LIST

EQUIPMENT :- EVAPORATOR FAN MOTOR, D90L FLANGE MOUNTED

No. TS 6923

DRAWING No. R 333369

SPECIFICATION No. -

SHEET No. 1

ILLUSTRATED PLATE No. A.1370

No. OF SHEETS 1

ITEM No ON PLATE	QTY	DESCRIPTION	PART NUMBER
		Complete Motor	333369
1	1	Shaft and Rotor Assembly	707359
2	1	Shaft only	707360
3	1	* Wound Stator Frame	707361
4	1	N.D. Endshield (GEC 617 2303 4521 11)	707362
5	1	* Set of Bearings (Pair of 6205Z)	701368
6	-		-
7	1	Terminal Box (GEC617 8658 9052 11)	707817
8	1	Terminal Box Lid (GEC 617 8658 9003 11)	707818
9	1	Terminal Block (GEC 617 8690 1037)	707816
10	1	* Gasket (Lid/Box) (GEC 617 8690 2014 11)	707819
11	1	* Gasket (Box/Frame) (GEC 617 8699 2004 13)	707820
12	1	Flanged D. Endshield (GEC 617 2303 4332 12)	708270
13	1	* Outer Face Seal (GEC 617 8911 1001 02)	707813
14	1	* Inner Oil Seal (GEC 2912 6019 82)	707812

* RECOMMENDED SPARES

NOTE: STANDARD FINISH ON FASTENERS
FERROUS, CADMIUM PLATED & PASSIVATED
NON FERROUS, ELECTRO-TINNED

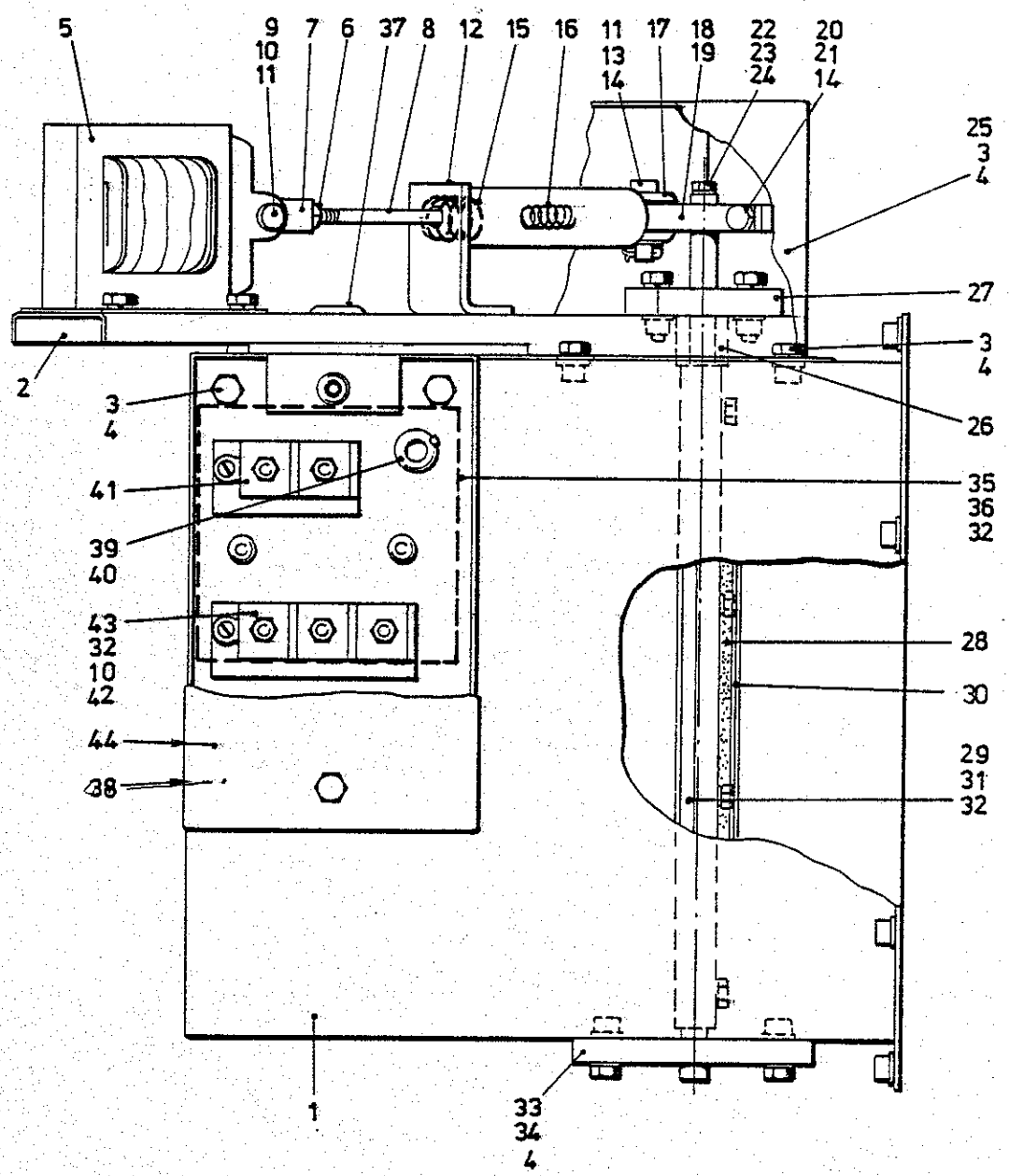

FRESH AIR DAMPER AND DUCT

A1379

SPARE PARTS LIST

EQUIPMENT :- FRESH AIR DAMPER AND DUCT

No. TS 6917

DRAWING No. J 333511

SPECIFICATION No. -

SHEET No. 1

ILLUSTRATED PLATE No. A. 1379

No. OF SHEETS 2

ITEM No ON PLATE	QTY	DESCRIPTION	PART NUMBER
		Complete Assembly	333511
1	1	Damper Door Duct	333504
2	1	Solenoid Support Bracket	333509
3	20	Screw, M6 x 16 mm long Stainless Steel Hex Head	-
4	25	Grover Washer, M6 Stainless Steel	-
5	1	* Solenoid (Warner Electric Type T10, 220V, 50 Hz)	707726
6	1	Full Nut, M6 Stainless Steel	-
7	1	Pivot Block	333741
8	1	Link Rod	333832
9	1	* Pivot Pin (Solenoid)	333826
10	11	Plain Washer, M5 Stainless Steel	-
11	1	* Split Pin (1.5 mm Dia x 16 mm mlong Steel)	135513
12	1	Guide Bracket	333743
13	1	* Pivot Pin (Lever)	333825
14	2	Plain Washer, M8 Stainless Steel	-
15	1	* Spring (Lee Springs No LC-045H-11)	708003
16	1	* Spring (Lee Springs No LC-055E-2)	707992
17	1	* Spring Housing	333742
18	1	Lever	333744
19	1	* Key (Parallel 3 mm x 3 mm x 12 mm long BS 4235)	707826
20	1	Bolt, M6 x 30 mm long Stainless Steel Hex Head	-
21	1	* Self Locking Nut (Aerotight Stiffnut M6 Stainless Steel)	316147
22	1	Screw, M4 x 12 mm long Stainless Steel Hex Hd.	-
23	1	Plain Washer, M4 Stainless Steel	-
24	1	Grover Washer, M4 Stainless Steel	-

* RECOMMENDED SPARES

NOTE: STANDARD FINISH ON FASTENERS FERROUS, CADMIUM PLATED & PASSIVATED NON FERROUS, ELECTRO-TINNED

SPARE PARTS LIST

EQUIPMENT :- SCREW THREAD SPECIFICATIONS

No. TS 5884

SHEET No. 1

No. OF SHEETS 1

The screw threads on equipment comply with the following British Standard Specifications:-

1. I.S.O. Metric Screw Thread:

Hexagon Screws, Bolts and Nuts	BS 3692	Grade 8.8
Machine Screws	BS 4183	Grade 4.8
Hexagon Socket Screws	BS 4168	Grade 12.9

2. Unified Screw Thread:

Hexagon Screws, Bolts and Nuts	BS 1768	Grade S
Machine Screws	BS 1981	

3. B.A. Screw Thread: BS 57

4. British Standard Whitworth Screw Thread:

Hexagon Screws, Bolts and Nuts	BS 1083	Grade S
Machine Screws	BS 450	Grade A

5. British Standard Fine Thread:

Not used in new Equipment

NUMERICAL LIST OF EQUIVALENT
B.R. CATALOGUE NUMBERS

TS SHEET NO 6919
Sheet No 1
No of Sheets 14

NUMERICAL LIST

Part No.	BR Cat No	Page	Part No.	BR Cat No	Page
108802	64/280	11			
109786		13			
			156088	64/416	13
114789		9,57,59	156821		47
119955		47	157138		37
			158275	64/623	47
			159802		7
			159803		9
120130	64/935	25	159915		25
120271		25	159919		5
120465	52/3050	25	159920		11
120547		25	159929		11
120562	24/1704	25			
120616		25			
121408		47			
123787	52/3053	25,47	160100		5
124496	64/3213	45	160382		5
124879		25	160383		45
124884	64/661	25			
135513		55,59	170220		57
140444		49	171675		37
142947	52/823	25,45	171721		5
143869		47	171734		11
145667		13	171736		5
148365		7,57			
148696		13			
148698		13			
			172285	64/2323	25,45

NUMERICAL LIST OF EQUIVALENT
B.R. CATALOGUE NUMBERS

TS SHEET NO 6919
Sheet No 2
No of Sheets 14

Part No.	BR Cat No	Page
172746		35
172747		35
173033	64/650	37
313838		49
316147		7,55
320743		47
325858		57
326641		9
332321		13
333028	110/325065/3GR	5
333195		5
333196		9,15
333291		9,29
333305		93
333306		9
333308		11
333309		11
333310		11
333321		9
333325		11
333330		11
333341		13,35

Part No.	BR Cat No	Page
333342		13,41
333343		7,51
333360		9
333362		13,25
333365		25
333367		9
333368		13
333369		51,53
333382		5
333384		9
333392		9
333393		9
333394		9
333395		9
333396		9
333402		5,33
333403		13,43
333424		5
333430		9
333431		9
333473		35
333477		35
333483		43
333489		9
333503		57
333504		55
333509		55
333511		7,55

NUMERICAL LIST OF EQUIVALENT
B.R. CATALOGUE NUMBERS

TS SHEET NO 6919
Sheet No 3
No of Sheets 14

Part No.	BR Cat No	Page
333602		5
333605		5
333663		45
333664		47
333669		47
333670		45
333671		45
333689		5
333716		37
333737		5
333741		55,59
333742		55,59
333743		55,59
333744		55
333745		57
333747		57
333748		57
333749		7,57
333750		41
333767		5
333774		13
333813		9
333814		7
333815		11
333816		11
333817		11
333818		11
333824		7
333825		7,55
333826		55,59

Part No.	BR Cat No	Page
333827		7,59
333828		59
333829		7
333830		7
333831		11
333832		55,59
333839		7,57,59
333840		57
333877		11
333878		11
333879		5
333886		59
333894		59
333898		59
333962		25
334022		45
334023		47
334365		5
700263		49
700594	64/636	47
700595	64/437	47
700596	64/642	47
700616	64/663	39
700617	64/664	39
700618	64/665	39
700620	64/753	39
701350		33
701368		53

NUMERICAL LIST OF EQUIVALENT
B.R. CATALOGUE NUMBERS

TS SHEET NO 6919
Sheet No 8
No of Sheets 14

Part No.	BR Cat No	Page	Part No.	BR Cat No	Page
811061		9			
811125		9			
811343		13			
905406	64/266	37			
905423		37,39			
911760		25			
913278		5			

PURCHASED ITEMS

Manfr & Ref	BR Cat No	Page
Arcolectric Ltd		
SL81C Amber 220V 50 Hz		41
SL81C Green 220 V 50 Hz		41
Armaflex		
13048 48 mm/13 mm		47
EN. Bray Ltd		
E19065		37
8Z-380V 3 ph 50 Hz		37
Budenberg Ltd		
Glass (Spare)	64/642	45
EF Bulgin Ltd		
72104-M		41
Carrier Corporation		
5H40-1001/A		25
5H40-1011/1	64/661	25
Carter Howden Ltd		
A2/4720		51
A2/4721		51
A2/4722		51
A2/4723		51

Manufr & Ref	BR Cat No	Page
1210		51
Danfoss Ltd		
9G0101	52/823	25,45
9G0003 } 9G0305 }	64/644	25,45
11L1101		25,45
Dean & Wood Ltd		
B1-4		25
Dunham-Bush Ltd		
O11P11		19
O12P13		17,19
O12P27		19
O14P17		17
O212PO2		17,19
O34P10		19
O51P36		19
O55P61		17,19
O58OP11		19
O72PO1		17
158-023-001		17
158-067-001		19
158-085-001		17
158-100-001		19
158-110-001		17
158-111-001		17
158-435-001		17
158-503-003		17
158-504-003		17
75UPH5(Q)		13,17

NUMERICAL LIST OF EQUIVALENT
B.R. CATALOGUE NUMBERS

TS SHEET NO 6919
Sheet No 14
No. of Sheets 14

PURCHASED ITEMS

Manfr & Ref	BR Cat No	Page	Manfr & Ref	BR Cat No	Page
Terminations Ltd					
TBA5,M5 Black		35,57,59			
Turngrove Ltd					
01621/3		5			
Ty-Rap					
7402		57			
Wallsall Conduits Ltd					
F316-32 mm		49			
F1660-32 mm		31			
Ward Brooke & Co Ltd					
Trafag BR41/198/1003/402		57			
Wärner Electric Co					
T10 220 V 50 Hz.		55,59			
YDNAC					
EmWard		9			

SECTION 1

INTRODUCTION AND GENERAL DESCRIPTION

Illustrations

Fig 1	8611	General Layout of Equipment
Fig 2	8608	Schematic Diagram of Refrigeration System and Air Circulation
Fig 3	8610	Torque Wrench Adaptors

INTRODUCTION

TYPE UP32 AIR CONDITIONING EQUIPMENT

GENERAL DESCRIPTION

The type UP32 air conditioning unit is a complete package assembly designed for mounting on the underframe structure of railway cars. The unit is charged with refrigerant R12 and including all necessary electrical control gear, requires only the connection of external power and control circuit supplies and remote control thermostats.

Power supply of 380 volt, 3 phase, 50 Hz is derived from one of two diesel alternator sets in the power car via the trainlines coupled between the cars. A 24 volt D.C. control relay supply associated with each power supply unit is cross connected between each coach to ensure equal loading on each alternator. Further information on electrical circuit operation is given in Section 15. All power supplies and thermostat circuits are introduced via plug and socket connectors.

The unit contains the following principal items of equipment:

1. Semi-hermetic motor compressor
2. Condenser coil with associated fan and motor unit
3. Liquid receiver and refrigerant filter/dehydrator
4. Evaporator coil with thermostatic expansion valve and distributor
5. Ventilation fan and motor unit
6. Electric air heater
7. Air filter
8. Electrical control panels and refrigeration monitoring and protection devices
9. Solenoid operated dampers for controlling air flow.

The cooling equipment incorporates a semi-hermetic reciprocating compressor equipped with a single stage unloading facility which, when energised by the operation of a refrigerant pressure sensitive switch, bypasses the output of one cylinder head directly into the suction side of the other head. This effectively reduces the output

under conditions of light air conditioning load by maintaining a constant evaporating temperature and correct relative humidity inside the car.

Accommodated in the compressor section are the liquid receiver and filter unit with the necessary system control stop valves and the refrigerant gauge and cut-out panel.

The condenser coil is accommodated in the end of the unit adjacent to the compressor section and comprises a plate finned coil with copper tubes hydraulically expanded into aluminium cooling fins to provide an efficient heat transfer. Air is drawn through the coil by a motor driven axial fan, discharging from the underside of the unit.

Sealed from the compressor and condenser sections is the air conditioning compartment housing the evaporator coil, air heater and associated motor driven centrifugal fan. Solenoid operated air dampers control the flow of conditioned air to the ceiling and floor level discharge ducts and restrict the flow of fresh air into the system under certain conditions.

Return air entering the unit via a slot in the top mixes with a proportion of fresh air drawn in through a damper controlled opening in the side of the evaporator section. This air mixture is filtered and drawn through the evaporator coil where its temperature and humidity is reduced, the moisture condensing on the surface of the coil unit. The condensate is collected in the drip tray below the evaporator coil and is piped to waste via special condensate water traps. The conditioned air is discharged by the evaporator fan into two ducts connected to the side of the unit. When cooling, an air damper closes one of these ducts so that air is discharged into the coach at ceiling level only, but when heating is required warm air is discharged at both ceiling and floor level. The air heater unit is mounted on the downstream side of the evaporator coil.

The heating and cooling equipments operate independently under control of the coach thermostat unit, electrical interlocks preventing simultaneous operation.

At ambient temperatures below 18°C the fresh air damper will remain closed and only recirculated air will be conditioned.

The electrical control gear is mounted on three covered panels adjacent to the gauge and cut-out panel, the fuse and circuit breaker panels being provided with an easy access hinged cover. The circuit breaker panel contains also the test push buttons and local indicator lamps.

8611

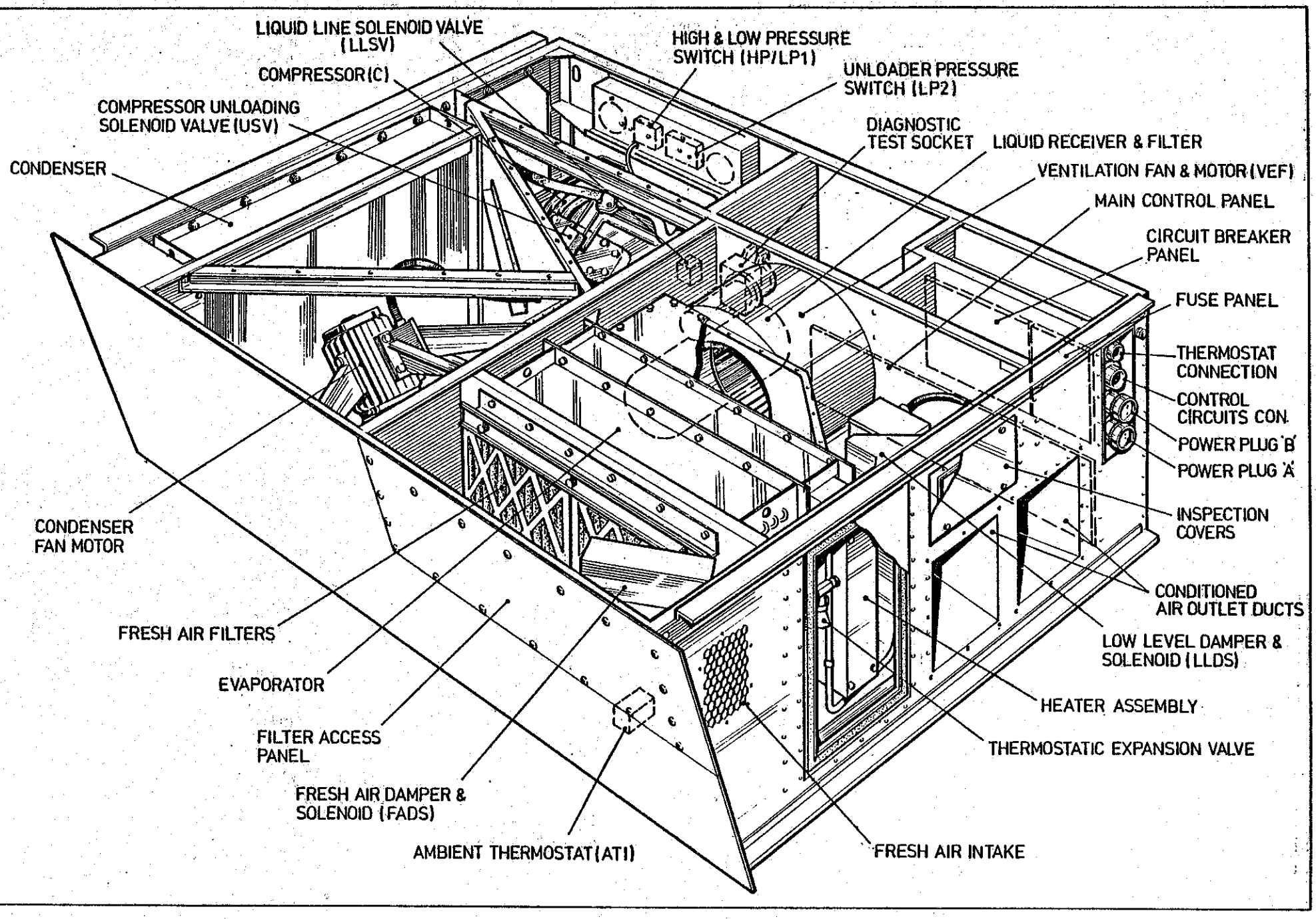

TYPE UP32 AIR CONDITIONING UNIT

SECTION 1

FIGURE 1

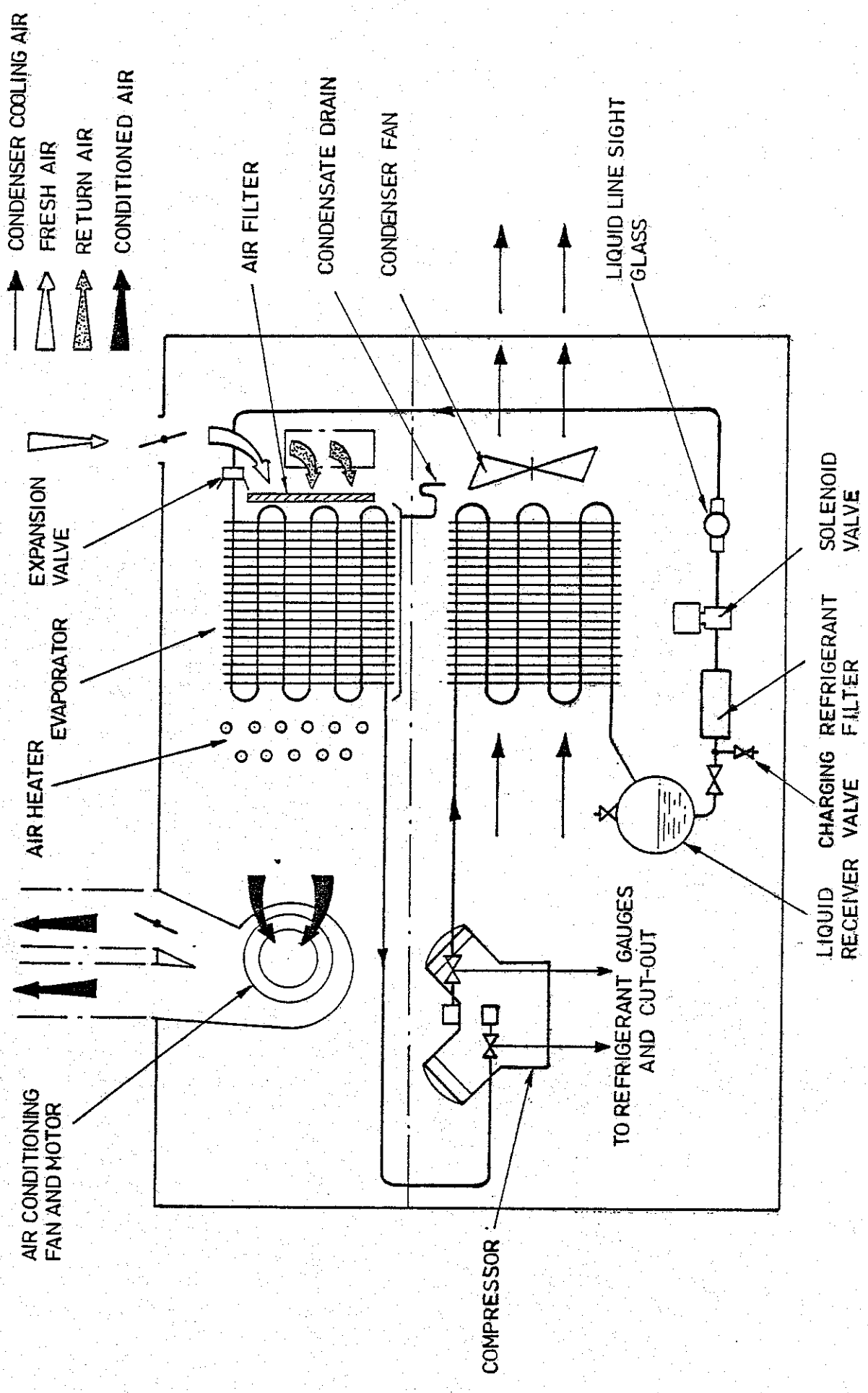

REFRIGERATION SYSTEM AND AIR CIRCULATION DIAGRAM	SECTION 1
	FIGURE 2

8608

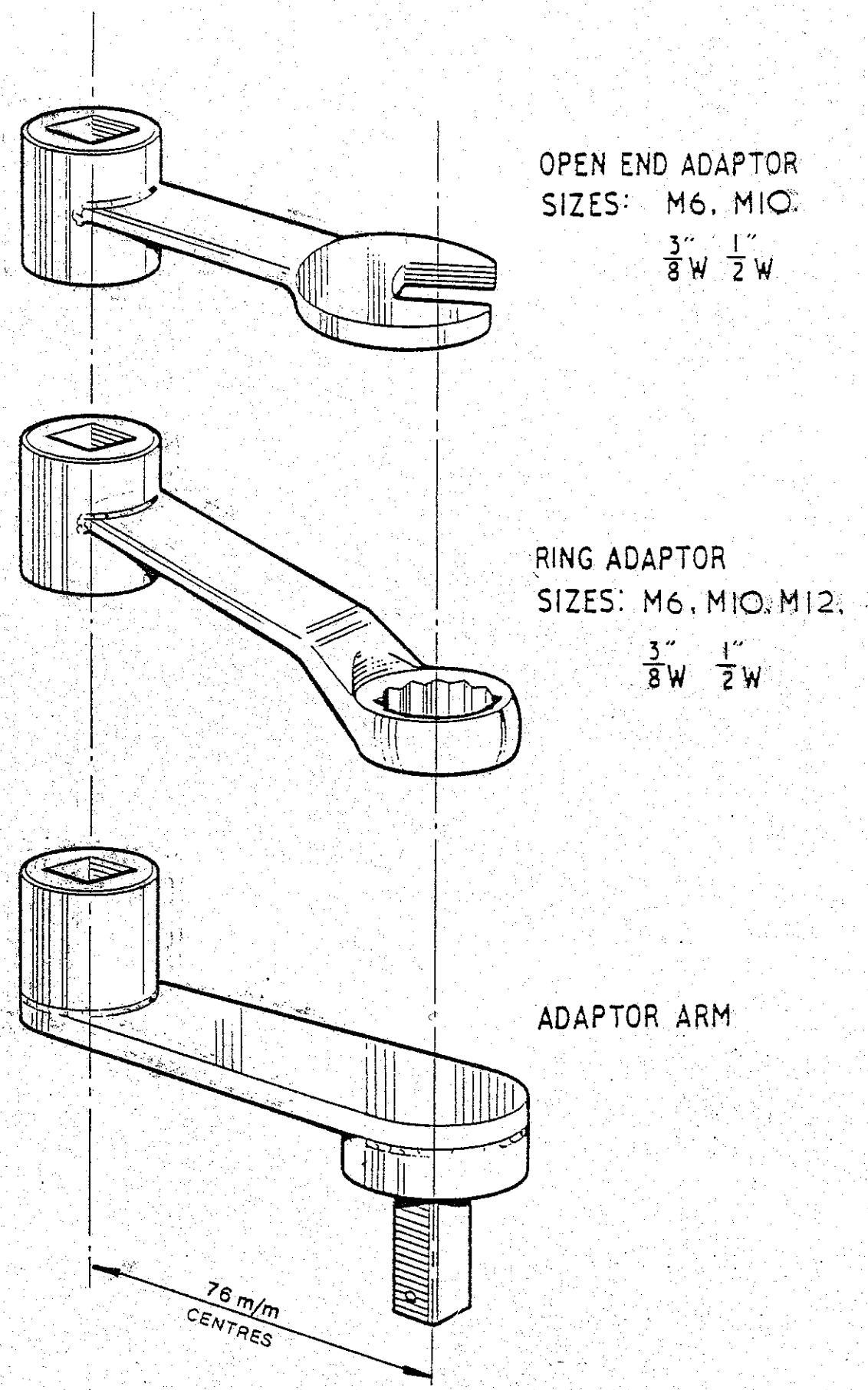

8610	TORQUE WRENCH ADAPTORS	SECTION 1
		FIGURE 3

SECTION 2

TERMS USED IN REFRIGERATION AND AIR CONDITIONING PRACTICE

Illustrations

TERMS USED IN REFRIGERATION AND AIR CONDITIONING PRACTICE

SENSIBLE HEAT

The heat added to or subtracted from a substance causing a change of temperature; that is to say, heat which can be detected or measured with a thermometer.

LATENT HEAT

This is 'hidden' heat, it cannot be detected by a conventional thermometer, and is heat added to or extracted from a gas or liquid, which causes a change of state with no change in temperature. Thus, if the temperature of water is raised at atmospheric pressure, a thermometer will show a steady rise until 100°C (212°F) is reached, after which the water changes into steam with no increase in temperature. Similarly, if water is cooled to a temperature of 0°C (32°F) any further cooling will produce ice.

TOTAL HEAT

This is the true value of the heat content of a substance whatever its state; it is the sum of the sensible and latent heats.

CAPACITY OF REFRIGERATING MACHINE

This is usually stated in tons of refrigeration. A refrigerating machine having a capacity of one ton will absorb heat at the rate represented by the melting of one American short ton (2000 lbs or 907 kg) of ice in twenty-four hours. The melting of one pound of ice absorbs 144 Btu, the melting of 2000 lbs. absorbs 288,000Btu. Therefore one ton of refrigeration is equivalent to an absorption of 288,000 Btu per day or 12,000 Btu per hour (3.517 kW). Normally, when giving the output of a machine, the evaporating and condensing temperatures at which the output is obtained should be stated.

BRITISH THERMAL UNIT

*The Btu is the amount of heat required to raise the temperature of one pound of water from 60° to 61°F or for all practical purposes 1°F. (1 Btu = **252 Calories** = 1055 Joules)*

THERMOMETER SCALES

To convert temperatures in degrees Fahrenheit (^{o}F) to temperatures in degrees Centrigrade (^{o}C) and vice versa, apply the following formulae:

$$^{o}C = 5/9\ (^{o}F - 32)$$
$$^{o}F = 9/5\ (^{o}C) + 32$$

For quick reference, Conversion of Fabrenheit and Centrigrade, see Fig 1.

HEAT FLOW

Heat always flows from a hot body to a cold body and never in the reverse direction.

PRESSURE TEMPERATURE RELATION

The temperature at which a liquid boils is governed by its pressure. An increase in pressure raises the boiling temperature, and vice versa. For example, water boils at 100°C (212°F) at atmospheric pressure, but at 1 kg/cm^{2} (14.2 lbs/in^{2}) gauge pressure it boils at 120°C (248°F), at an absolute pressure of 12 mm. mercury it boils at approximately 15°C (59°F).

REFRIGERANTS

This is the term given to volatile fluids used in refrigerating systems. Their suitability depends primarily on their particular pressure and temperature relationship.

They have similar properties to water in that they can be changed from a liquid to a gas by applying heat, and to a solid by lowering their temperature.

Most refrigerants are in a gaseous form under atmospheric pressure, and to store them in a liquid form, they are kept under pressure in steel cylinders.

Table Fig 2 shows the pressure temperature relationship of refrigerant R12.

AIR

Air is a mixture of various gases and water vapour, the higher its temperature the greater the quantity of water vapour it can contain.

SENSIBLE HEAT

In the case of air this is the quantity of heat which causes alteration in its temperature without change in the water vapour content.

LATENT HEAT

This is the heat required to alter the water vapour content of the air at constant pressure and temperature.

RELATIVE HUMIDITY - % R.H.

This is the ratio of water vapour in a quantity of air to the amount of water vapour it would hold if saturated at the same temperature.

DRY BULB TEMPERATURE ^{o}C (^{o}F) D.B.

The temperature indicated by an ordinary thermometer.

WET BULB TEMPERATURE ^{o}C (^{o}F) W.B.

This, in conjunction with the dry bulb temperature, indicates the total heat of the air. Due to evaporation of moisture from a saturated wick surrounding the bulb, the temperature of the bulb is depressed below that of the dry bulb thermometer, depending upon the amount of water vapour in the atmosphere.

EFFECTIVE TEMPERATURE

This may be defined as an arbitrary index which combines into a single value the effect of temperature, humidity and air movement on the sensation of warmth or coldness felt by the human body. The numerical value is that of the temperature of still saturated air which would induce an identical sensation.

Fig 3 shows an effective temperature or comfort chart. It can be seen from this chart, that an effective temperature of 21°C can, for example, be expressed as 22.6°C D.B. at 70% R.H. or approx. 25.4°C D.B. at 30% R.H. (Note that the 21°C effective temperature line intersects both of these points on the chart). In effect, therefore "still" air, (which refers to air moving at velocities of 4.5-7.5 m/min (15-25 ft/min)) at 22.6°C D.B. and 70% R.H. may be said to produce the same sense of comfort as still air at a condition of 25.4°C D.B. and 30% R.H.

DEW POINT

This is the temperature at which the air is saturated with moisture, that is 100% R.H. and any further lowering of temperature causes condensation of some of the water.

COMFORT CONDITIONS

It is not possible or practicable to lay down any fixed conditions of comfort, as the human body, although to a varied degree, tends to adapt or acclimatize itself to prevailing conditions.

It will be understood that what may be a comfortable condition in a car in say America, may not necessarily be the most comfortable in a country such as Malaya.

The Stone Air Conditioning System is designed to meet the variations of climate in any country, and provides a balanced condition of temperature, humidity, cleanliness, and correct air motion within a car, which is a pleasing contrast to the prevailing outside conditions, and which is generally acceptable to the travelling public.

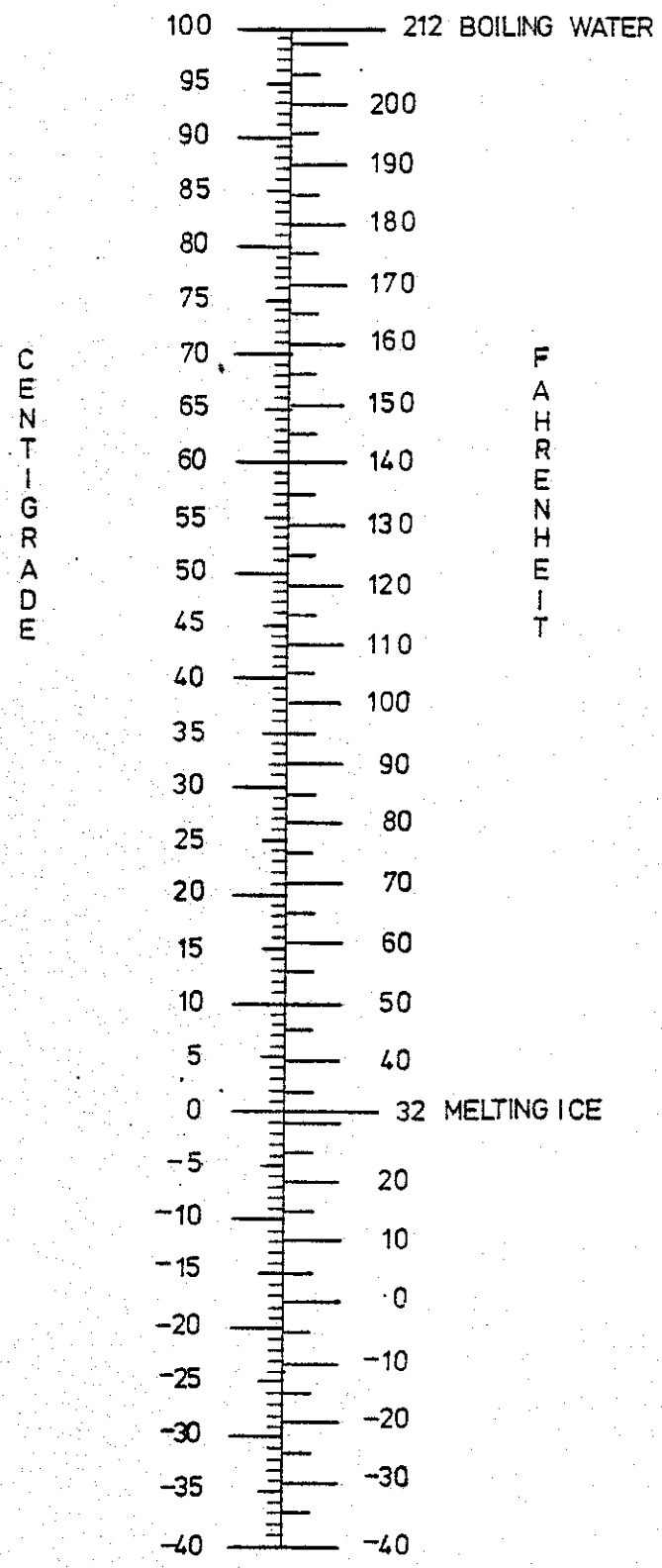

TEMPERATURE COMPARISON SCALE	SECTION 2
	FIGURE 1

1320/2

TEMP. °F	TEMP. °C	PRESS. Lb/ in²	PRESS. Kg/cm²	TEMP. °F	TEMP. °C	PRESS. Lb/ in²	PRESS. Kg/cm²	TEMP. °F	TEMP. °C	PRESS. Lb/ in²	PRESS. Kg/cm²	TEMP. °F	TEMP. °C	PRESS. Lb/ in²	PRESS. Kg/cm²	TEMP. °F	TEMP. °C	PRESS. Lb/ in²	PRESS. Kg/cm²
0	-17.8	9.5	0.66	36	2.2	33.5	2.37	72	22.2	73.0	5.14	108	42.2	134	9.42	144	62.2	217	15.30
2	-16.7	10.2	0.71	38	3.3	35.2	2.50	74	23.3	75.5	5.30	110	43.3	138	9.70	146	63.3	223	15.70
4	-15.6	11.3	0.79	40	4.4	37.0	2.60	76	24.4	78.5	5.52	112	44.4	142	10.00	148	64.4	228	16.20
6	-14.4	12.4	0.87	42	5.6	39.0	2.74	78	25.6	81.0	5.70	114	45.6	146	10.30	150	65.6	233	16.43
8	-13.3	13.5	0.95	44	6.7	41.0	2.88	80	26.7	84.0	5.90	116	46.7	150	10.55	152	66.7	237	16.70
10	-12.2	14.7	1.03	46	7.8	42.7	3.00	82	27.8	87.0	6.12	118	47.8	154	10.85	154	67.8	243	17.10
12	-11.1	16.0	1.13	48	8.9	44.7	3.15	84	28.9	90.0	6.33	120	48.9	158	11.12	156	68.9	249	17.50
14	-10.0	17.2	1.21	50	10.0	46.7	3.29	86	30.0	93.5	6.57	122	50.0	162	11.40	158	70.0	254	17.85
16	- 8.9	18.5	1.30	52	11.1	49.0	3.45	88	31.1	96.5	6.80	124	51.1	167	11.77	160	71.1	260	18.32
18	- 7.8	20.0	1.40	54	12.2	51.0	3.60	90	32.2	100.0	7.04	126	52.2	172	12.10	162	72.2	265	18.65
20	- 6.7	21.0	1.48	56	13.3	53.0	3.73	92	33.3	103.0	7.25	128	53.3	176	12.40	164	73.3	271	19.10
22	- 5.6	22.5	1.59	58	14.4	55.5	3.90	94	34.4	106.5	7.47	130	54.4	181	12.75	166	74.4	276	19.45
24	- 4.4	24.0	1.70	60	15.6	58.0	4.08	96	35.6	110.0	7.73	132	55.6	186	13.10	168	75.6	281	19.80
26	- 3.3	25.5	1.80	62	16.7	60.0	4.21	98	36.7	113.5	7.97	134	56.7	191	13.45	170	76.7	287	20.10
28	- 2.2	27.0	1.90	64	17.8	62.5	4.40	100	37.8	117.0	8.23	136	57.8	196	13.80				
30	- 1.1	28.5	2.00	66	18.9	65.0	4.57	102	38.9	121.0	8.50	138	58.9	201	14.15				
32	0.0	30.0	2.10	68	20.0	67.5	4.75	104	40.0	125.0	8.80	140	60.0	205	14.43				
34	1.1	32.0	2.23	70	21.1	70.2	4.90	106	41.1	128.0	9.00	142	61.1	211	14.80				

3189/2

TEMPERATURE/PRESSURE RELATIONSHIP for R12

SECTION 2

FIGURE 2

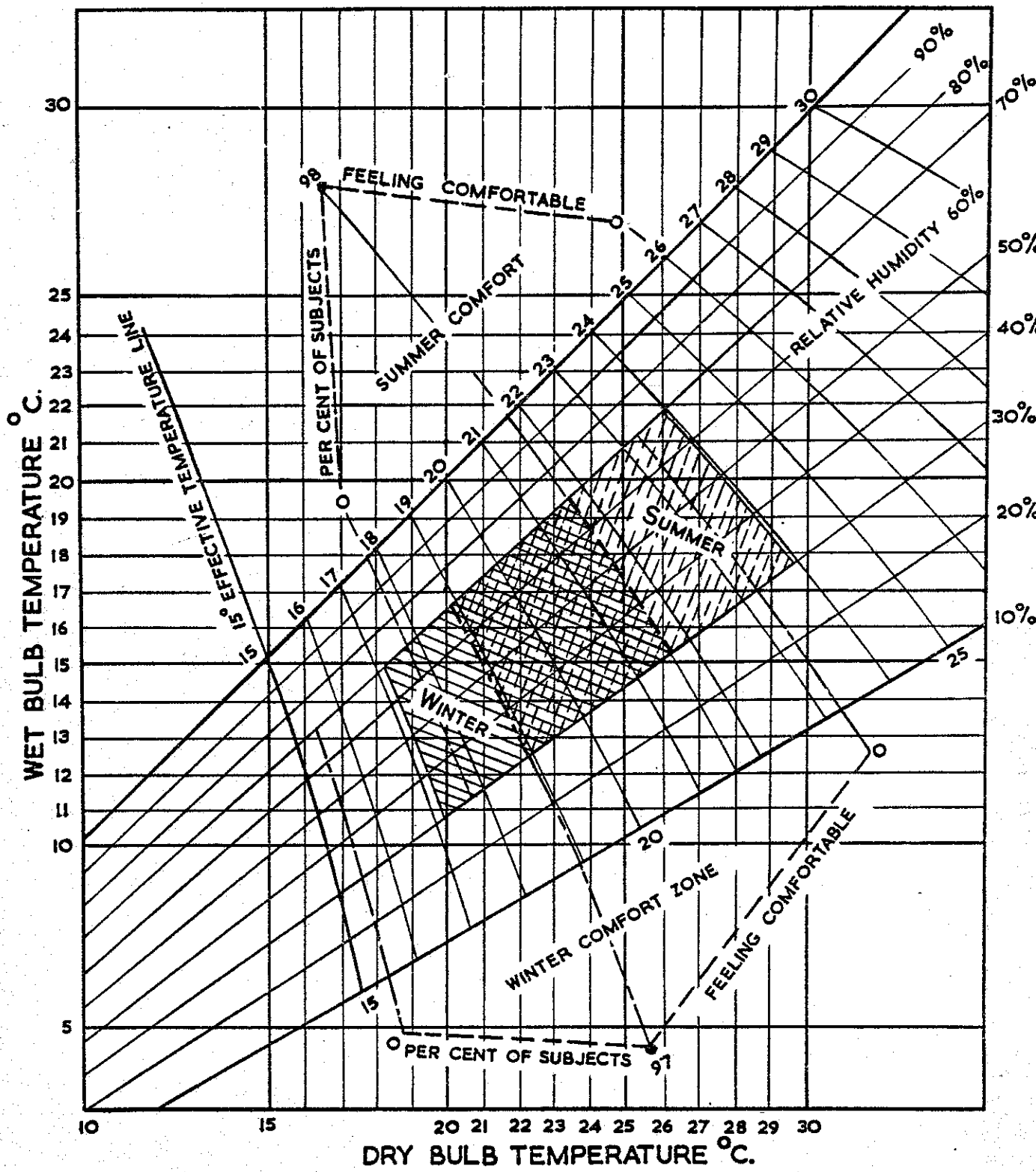

AVERAGE WINTER COMFORT ZONE
AVERAGE WINTER COMFORT LINE
AVERAGE SUMMER COMFORT ZONE
AVERAGE SUMMER COMFORT LINE

592 / 2	ASHVE COMFORT CHART (CENTIGRADE).	SECTION 2 FIGURE 3

SECTION 3

REFRIGERATION SYSTEM

Illustrations

REFRIGERATION SYSTEM

Air conditioning is provided by a single package unit mounted on the underframe of each car, the system providing passenger comfort in terms of temperature, humidity, noise and cleanliness.

Each unit is completely self contained, and employing the mechanical compression system of refrigeration operates automatically to control the temperature and humidity in the passenger accommodation.

REFRIGERATION CYCLE

The system comprises the following principal components:

- Compressor
- Condenser
- Liquid Receiver with dehydrator filter
- Expansion Valve
- Evaporator

The compressor draws refrigerant vapour from the evaporator, compresses it to a higher pressure and in so doing raises its temperature. This high temperature vapour is delivered into the air cooled condenser, where heat is removed by the passage of ambient air over the condenser coil. The vapour liquifies and collects in the liquid receiver.

Liquid refrigerant flows from the receiver through the filter unit and is then piped to the evaporator. It is metered through a small orifice in the thermostatic expansion valve where its pressure and temperature is reduced, and on passing into the evaporator coil at a lower pressure it evaporates. The air passing over the evaporator coil is lowered in temperature and its moisture content is reduced, causing condensation on the evaporator surface, this condensate being collected in the drip tray beneath the coil and piped to waste via special water traps sited below the drip tray.

The refrigerant is completely vaporised when leaving the evaporator and returns in this state to the compressor, completing the refrigeration cycle.

Reference to fig 2 at the end of Section 1 illustrates the refrigeration and air conditioning cycle in simplified schematic form.

WARNING: THE REFRIGERANT (TYPE R12) USED IN THE AIR CONDITIONING SYSTEM IS A HAZARDOUS SUBSTANCE.

R12 (DICHLORODIFLUOROMETHANE - CCl_2F_2) IS NON-TOXIC, NON-INFLAMMABLE AND NON-CORROSIVE TO MOST COMMON METALS, BUT DOES INCORPORATE FREON GAS WHICH FORMS PHOSGENE (POISONOUS) WHEN INHALED THROUGH BURNING TOBACCO. SMOKING IN THE PRESENCE OF R12 IS THEREFORE STRONGLY DISCOURAGED.

R12 WHEN PURE IS COLOURLESS AND ALMOST ODOURLESS, IT MIXES READILY WITH OIL, BUT NOT WITH WATER. ITS BOILING POINT AT ATMOSPHERIC PRESSURE IS $-30^{\circ}C$ ($-22^{\circ}F$). THEREFORE, IT EVAPORATES INSTANTLY, THUS CAUSING FREEZING. IF ALLOWED TO CONTACT THE SKIN, PARTICULARLY OF THE FACE OR FOREARMS, SEVERE FREEZE-BURNING CAN RESULT.

IF THE REFRIGERANT SHOULD ENTER THE EYES, OBTAIN MEDICAL ASSISTANCE IMMEDIATELY, RECOMMENDED FIRST-AID TREATMENT IS AS FOLLOWS:

DO NOT RUB EYES
INTRODUCE A FEW DROPS OF STERILE MINERAL OIL TO ACT AS AN IRRIGATOR.
ALTERNATIVELY, WASH THE EYES WITH EITHER A WEAK SOLUTION OF BORIC ACID OR A SALINE SOLUTION (2% SODIUM CHLORIDE).

STORAGE OF REFRIGERANT

Refrigerant R12 is supplied and stored in steel cylinders with the nett and gross weight stencilled on the side of each cylinder.

Always weigh cylinders before and after removing (or adding) refrigerant to them and attach a label stating the weight of the refrigerant content in order that the amount in stock can be readily ascertained. Cylinders must not be dropped, and full or partly filled cylinders should be stored in a reasonably cool place under cover where there is no danger of fire.

After use always ensure that the valve is properly closed, that the valve nozzle cap is replaced securely and that the cylinder cap is in position. Never attempt to pump more refrigerant into a cylinder than the nett weight stated on that cylinder.

SYSTEM CAPACITY

The unit has a rated cooling capacity of 23 kW, with an outside air temperature of 28°C, to maintain an internal temperature of 21°C with full passenger loading. The total de-humidified air in circulation is 3600 m^3/hr. comprising 2090 m^3/hr. of recirculated air and 1510 m^3/hr fresh air.

The heating capacity is 24 kW at 380 volts comprising two banks each of 7 kW and a single bank of 10 kW.

An outside air damper prevents entry of fresh ventilating air during pre-heating, the whole of the interior air being re-circulated until the interior temperature rises to a specified level (18°C). During pre-heating and normal heating cycles the air is supplied to the coach interior through both roof-level and floor-level ducts in the approximate proportions of 40% and 60% respectively.

The total volume flow rate is 3700 m^3/hr against an external static pressure of 40 mm water gauge. During ventilation and cooling the unit low level damper closes off the air supply to the floor level ducts and the whole of the air is supplied to the coach via the roof level duct.

REFRIGERATION INSTRUMENTS AND CONTROLS

The refrigeration system incorporates high and low pressure gauges and a dual element pressure sensitive cut-out switch. These are mounted together with gauge shut-off valves and a single element unloading pressure switch on the refrigeration control panel sited over the compressor.

Pressure Gauges

These gauges are of the conventional Bourdon type with dials graduated for indication of refrigerant pressure and temperature, see figs 4 and 5.

High/Low Pressure Cut-out Switch

This dual range cut-out has a single pole, single throw switch operated by both high and low pressure elements. Should condenser pressure exceed, or suction pressure fall below the design conditions, either element will cause the cut-out to open circuit, shutting down the cooling equipment.

The switch contact will be opened with rising pressure on the high pressure element, this element being provided with manual reset facility. The high pressure necessary to trip this element will occur only on a fault condition and the fault must be traced and cleared before re-setting the high pressure cut-out.

Abnormally low suction pressure will cause the low pressure element to trip the switch contact. Under normal operation this will occur at the end of a pump-down sequence after a cooling cycle when the cooling relay is released. This closes the liquid line solenoid valve causing the suction pressure to fall. The compressor motor contactor is then released by the switch contact and the compressor and condenser fan motors will come to rest. As the system pressure will rise after shut-down due to refrigerant gas boiling from the compressor lubricant, the low pressure element will reset automatically ready for a further demand for cooling.

High/Low Pressure Switch Adjustment

Range and differential adjusting screws are situated beneath the removable top cover, and both are preset to the appropriate figures given in the data sheets. Normally no further adjustment should be necessary. However, to check the settings the following procedure should be adopted:

1. *High Pressure Element*

    a. *Stop the airflow through the condenser by blanking off the face of the condenser with a suitable sheet of plywood or hardboard.*

    b. *Start the compressor, observe the high pressure gauge and note the reading at which the high pressure switch operates to shut down the equipment. (If the ambient temperature*

is too low for starting under thermostatic control the equipment may be started using the "cooling test" push button which must be held depressed until the equipment shuts down on high pressure).

c. *If the equipment is not shutting down at the correct pressure as given on page 3 of the Equipment Data Sheets adjust the high pressure range adjustment screw accordingly. See* ***figure 2*** *at the end of this section.*

Note: The high pressure cut-out must not be subjected to pressures exceeding 29 bar.

2. *Low Pressure Element*

The low pressure element is provided to shut down the cooling equipment on abnormally low refrigerant pressure, usually at the end of a pump-down cycle. The setting (stated in the Equipment Data Sheets) a little above atmospheric pressure, is chosen to ensure that in the event of a system leakage on the low pressure side the equipment will shut down before air can be drawn into the system.

The low pressure element is of the automatic reset type with a separate adjustment facility to vary the differential between trip and reset. Again, the recommended setting is given in the data sheets.

The cut-out and reset pressures can be checked by observing the low pressure gauge at the end of a cooling cycle or by closing the compressore suction stop valve before starting the compressor motor and then observing the low pressure gauge reading when the cooling system shuts down. The "cooling test" pushbutton may be used to start the compressor in conditions of low ambient temperature.

After the test, with the power isolated, return the suction stop valve to the normal fully open condition.

Unloading Pressure Switch

The unloading pressure switch, illustrated in figure 3, is a single pole, single element unit, the description being similar to the low pressure element of the HP/LP cut-out. This switch controls the point at which the compressor unloads capacity during periods of low air conditioning load. A brief description of the capacity control operation is given in Section 4 covering the compressor.

Control Valves

With the exception of the gauge valves and refrigerant charging valve on the liquid receiver, all other stop valves in the system are of the packed gland type. The gland nut on a stop valve spindle should NOT be tightened unless gas leakage occurs from the gland. If the gland continues to leak after the gland nut is tightened it should be re-packed with P.T.F.E. beading, ceramic fibre or other refrigerant-proof sealing washers. The stop valves are provided with sealing caps covering the valve stem and some of these caps are fitted with joint rings to ensure a gas-tight joint when the cap is tightened onto the valve body. The sealing caps should always be re-fitted & tightened onto the valve after any test or service operation on the system which has necessitated the use of stop valves.

All valves in the system should normally be kept fully open except the charging valve and purge valve on the liquid receiver which must be kept fully closed. The valves controlling the pressure gauges should, however, be slightly open, just sufficient to obtain a gauge reading, i.e. with the minimum of pointer oscillation, and during normal operation the gauge valves may be left fully closed.

Liquid Line Moisture Indicator

A liquid line moisture indicator sight glass is included in the system between the liquid line solenoid valve and the evaporator. This indicator, normally green, displays evidence of circulation of refrigerant, and the presence of moisture in

the system will cause the indicator to change colour towards yellow. The indicator is visible below the solenoid valve immediately to the right of the liquid receiver.

Liquid Line Solenoid Valve

The liquid line solenoid valve is employed to control the flow of refrigerant to the evaporator coil. The valve is controlled by the air temperature thermostat via the cooling relay on the control panel. When cooling demand ceases the relay will cause the solenoid valve to close, and as the system suction pressure falls below the limit set by the low pressure cut-out, the compressor will shut down. When the interior temperature rises again the solenoid valve will be re-energised and the equipment will re-start automatically.

System Pump Down Procedure

When it is necessary to change the refrigerant filter/dehydrator cartridge, or repair a system leakage between the liquid receiver and evaporator coil or in the suction line between the evaporator coil and compressor it will first be necessary to pump down the refrigerant into the liquid receiver. Proceed as follows:

1. Start the compressor. If ambient temperature is too low for normal start use the "cooling test" pushbutton, holding the button depressed until pump-down is complete.

2. Close the outlet valve on the bottom of the liquid receiver.

3. As the suction pressure falls below the setting of the low pressure cut-out the compressor will stop.

4. As the suction pressure rises the compressor will re-start automatically. Allow the compressor to cycle twice more under control of the L.P. cut-out and then with the compressor stopped isolate the power supply.

5. If pipework repairs are necessary close the compressor suction and delivery stop valves and label the equipment accordingly.

Note that high refrigerant pressure will exist between the compressor and liquid receiver stop valves including the condenser coil.

See Section 5 for details of filter renewal.

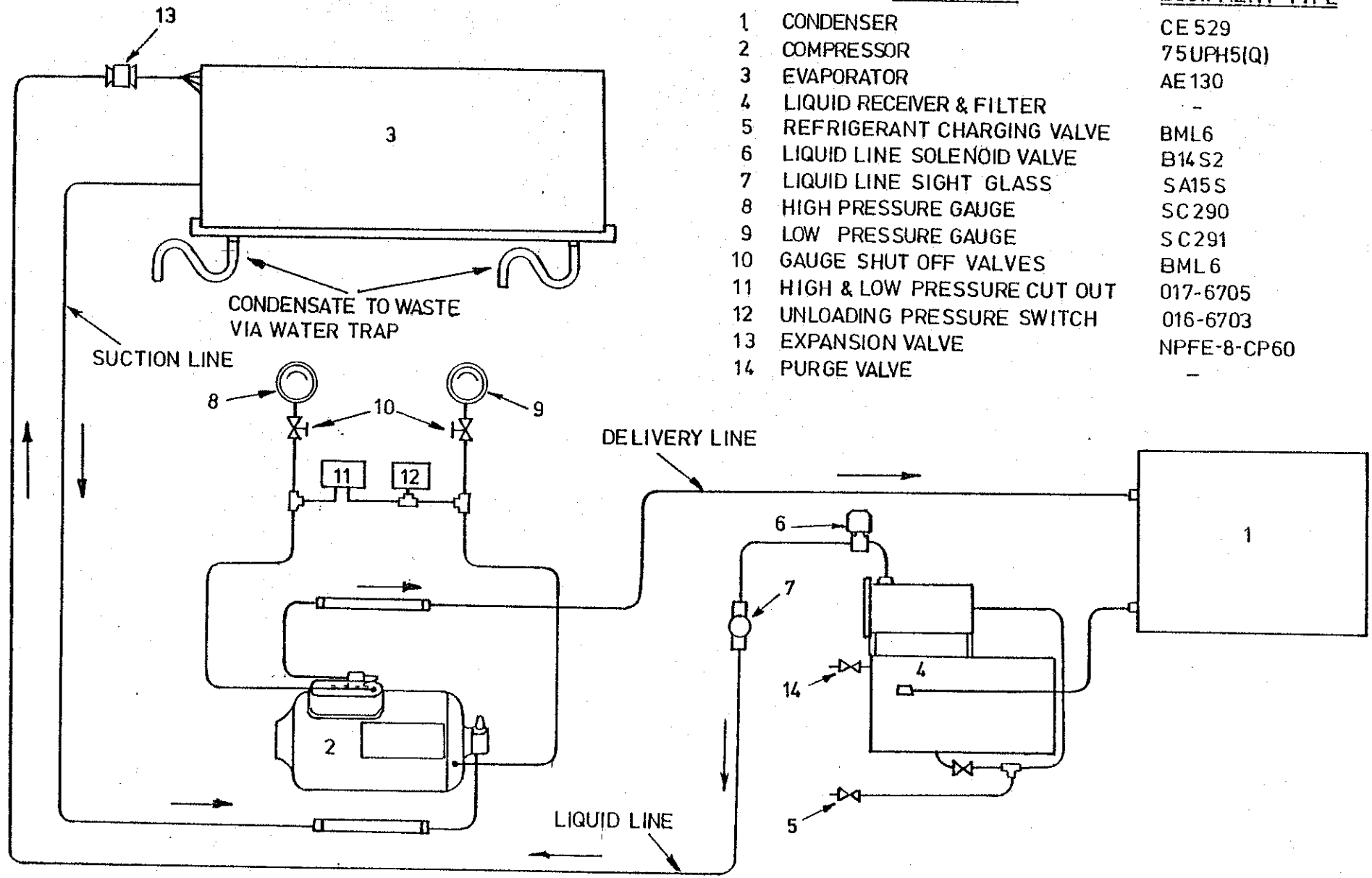

ITEM	DESCRIPTION	EQUIPMENT TYPE
1	CONDENSER	CE 529
2	COMPRESSOR	75UPH5(Q)
3	EVAPORATOR	AE 130
4	LIQUID RECEIVER & FILTER	–
5	REFRIGERANT CHARGING VALVE	BML6
6	LIQUID LINE SOLENOID VALVE	B14S2
7	LIQUID LINE SIGHT GLASS	SA15S
8	HIGH PRESSURE GAUGE	SC290
9	LOW PRESSURE GAUGE	SC291
10	GAUGE SHUT OFF VALVES	BML6
11	HIGH & LOW PRESSURE CUT OUT	017-6705
12	UNLOADING PRESSURE SWITCH	016-6703
13	EXPANSION VALVE	NPFE-8-CP60
14	PURGE VALVE	–

PIPE AND VALVE SCHEMATIC FOR TYPE UP 32 PACKAGE AIR CONDITIONING UNIT

SECTION 3

FIGURE 1

8609

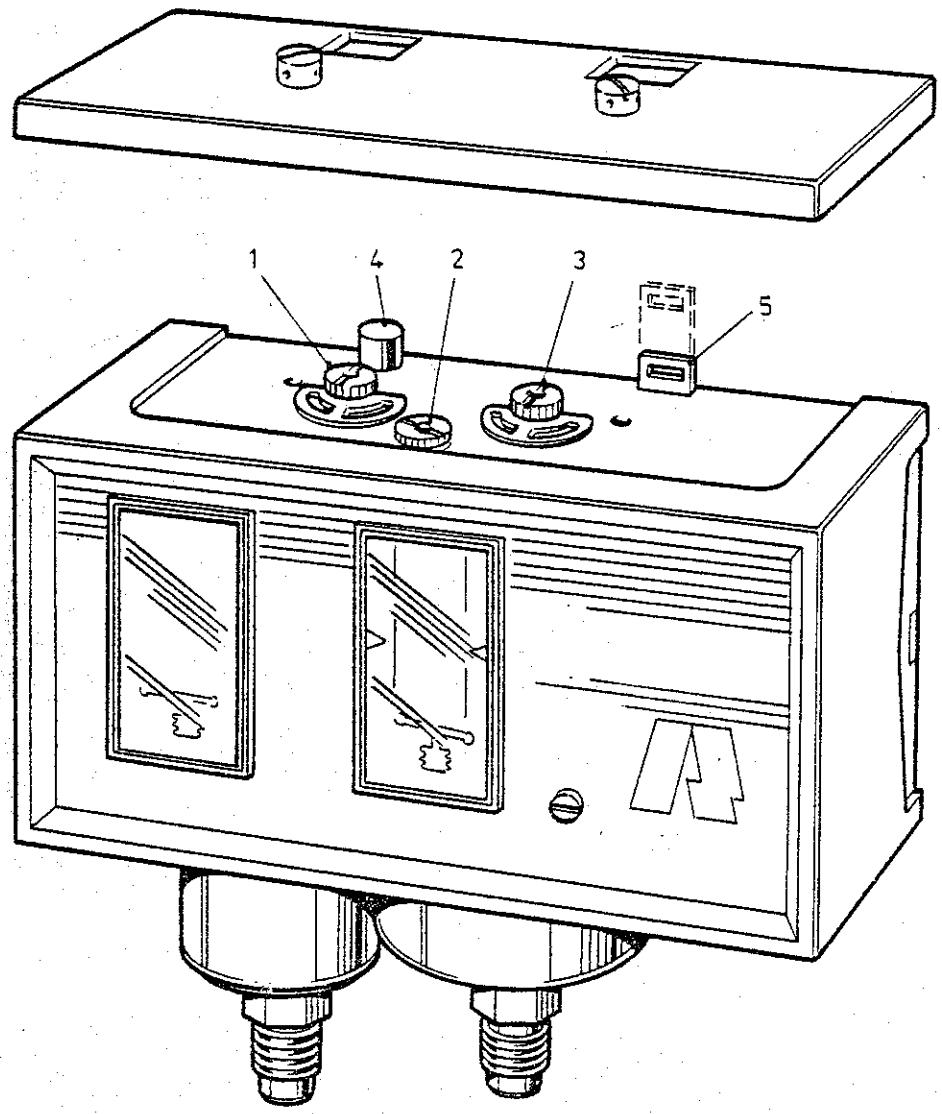

1. H.P. RANGE ADJUSTMENT SCREW
2. DIFFERENTIAL ADJUSTMENT SCREW
3. L.P. RANGE ADJUSTMENT SCREW
4. H.P. RESET BUTTON } WHEN REQUIRED.
5. L.P. RESET INDICATOR }

8295	DUAL PRESSURE CONTROL SWITCH (017-6705)	SECTION 3
		FIGURE 2

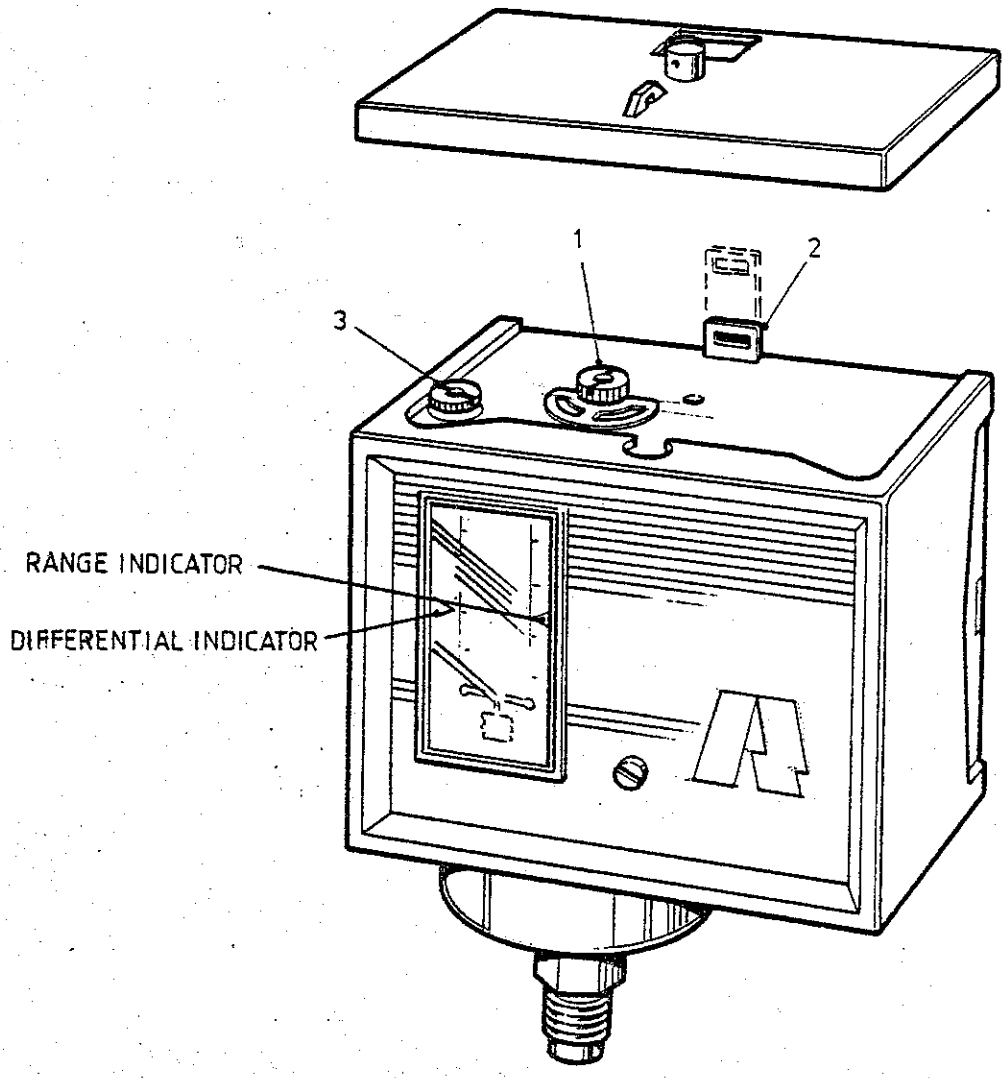

1 RANGE ADJUSTMENT SCREW.
2 RESET INDICATOR (when required) FOR MANUAL RESET ONLY.
3 DIFFERENTIAL ADJUSTMENT SCREW

8294

HIGH or LOW PRESSURE CUT-OUT SWITCH (TYPE 016-6703,6705,6750,6751)	SECTION 3
	FIGURE 3

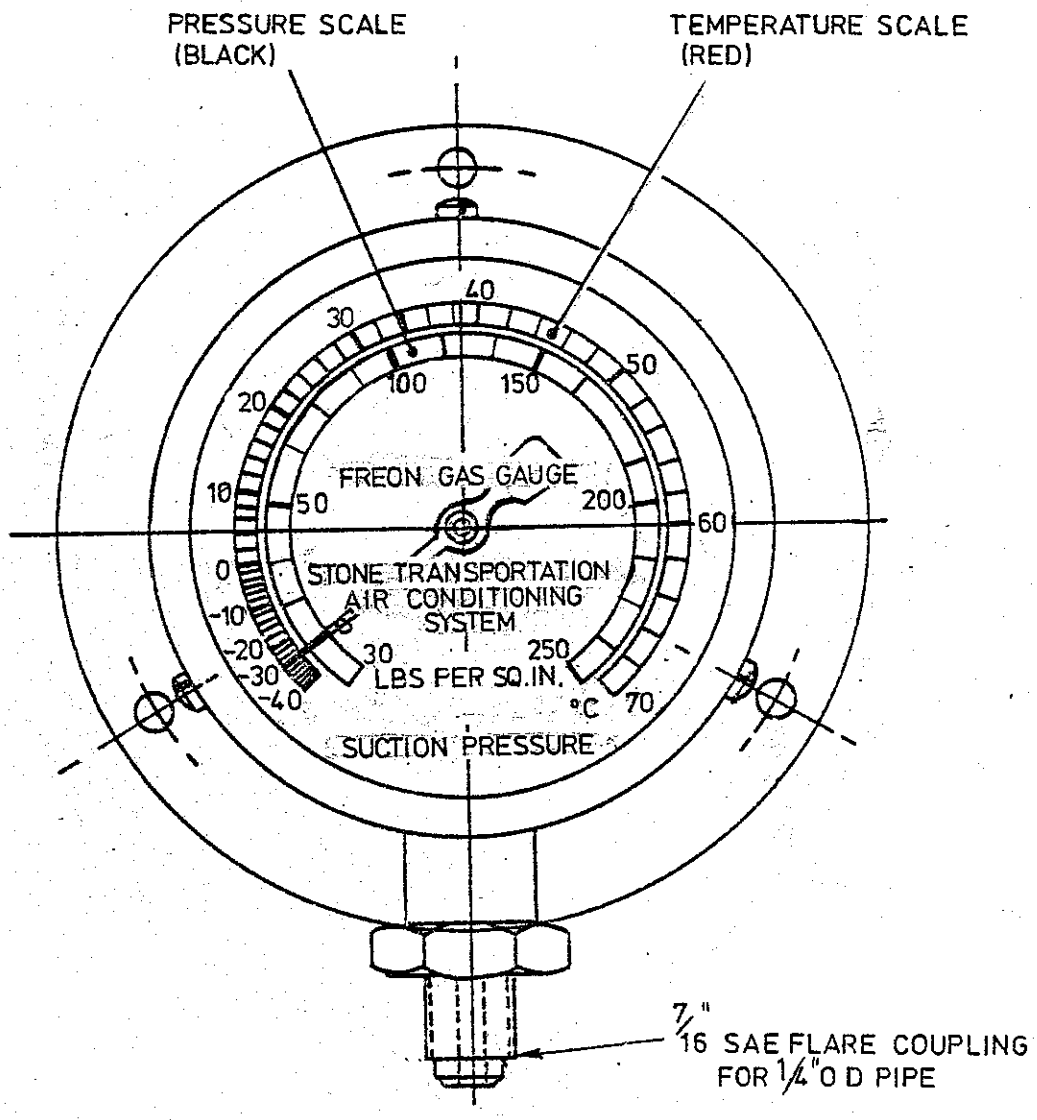

8612	SUCTION PRESSURE GAUGE	SECTION 3
		FIGURE 4

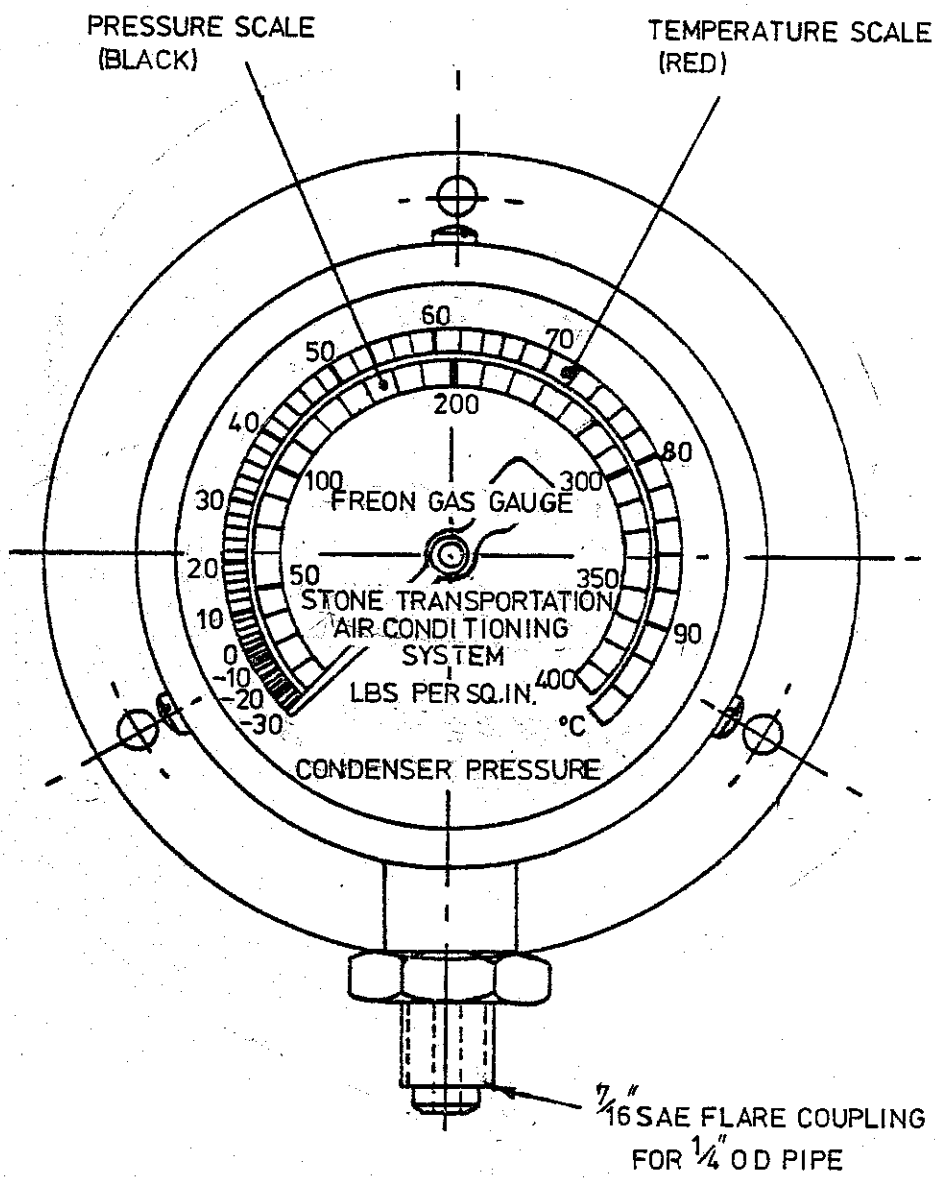

8613	CONDENSER PRESSURE GAUGE	SECTION 3
		FIGURE 5

Stone Transportation

Gatwick Road (PO Box 5) Crawley West Sussex RH10 2RN
Telephone Crawley (0293) 27711 Telex 87132

Publication M1220

INSTRUCTION MANUAL & ILLUSTRATED LIST OF COMPONENTS for AIR CONDITIONING EQUIPMENT Type UP32

STANDARD CLASS & CATERING CARS

BRB/CIE R0.200269

Spec: MT 123 Iss.2

Date: December 1983

8150/2

REVISION RECORD

REVISION		
NUMBER	DATE	INSERTED BY

REVISION		
NUMBER	DATE	INSERTED BY

4 Amended pages to this publication will have the amendment indicated by a black line on the left hand side of the page adjacent to the paragraph or illustration.
The figure adjacent to the black line will indicate the amendment number registered.

I N D E X

SECTION 4

REFRIGERATION COMPRESSOR

TYPE 75UPH5(Q)

Illustrations

REFRIGERATION COMPRESSOR

TYPE 75UPH5(Q) WITH ELECTRICAL UNLOADER

GENERAL DESCRIPTION

The motor compressor incorporated in the air conditioning system for the C.I.E coaches is a 6 cylinder Dunham-Bush type 75UPH5(Q) semi-hermetic unit with the driving motor enclosing in the same housing. The compressor is equipped with a 220V. 50 Hz. electrical unloading device to reduce output when the system is operating under light load conditions. The construction is arranged to facilitate ready access to wearing parts and routine servicing may be carried out without the need of special tools.

The driving motor stator is equipped with a three phase star-connected winding arranged for direct-on-line starting from a 380 volt, 3 phase 50 Hz supply.

A motor over-temperature protection thermostat of the Klixon type is incorporated and connected to the motor terminal box as shown in the compressor motor connection diagram at the end of this section. In the event of excess motor temperature the thermostat contacts will open to disconnect the motor supply circuit. The thermostat is self-resetting.

Motor cooling is achieved by the flow of refrigerant suction gas over the rotor and stator windings.

LUBRICATION

All bearing surfaces are lubricated by oil pressure provided by an automatic reversing gear type pump driven directly from the compressor crankshaft. A pressure relief valve mounted in the compressor pump-end cover maintains a constant oil presure. During operation a visual check through the sight glass should show the oil being agitated. If there is any doubt about correct pump operation check the pressure by installing a gauge in the 1/4" pipe tapped opening in the end cover. Oil pressure differential should be 1.4 kgf (20 lbf).

The correct charge of lubricating oil is normally added to the compressor prior to delivery but the level should be checked prior to commissioning. The recommended lubricant is specified in the Equipment Data Sheets at the end of the manual. On no account should oil that has been removed from a compressor be used again for compressor lubrication.

INSTALLATION

OIL LEVEL

The oil level must be checked on installation of the equipment and at each time that a compressor is refitted after removal for overhaul. The correct level of oil should be observed after shut down of the equipment following a period of normal operation. At this time the oil level should be between 1/2 to 3/4 up from the bottom of the sight glass with the compressor stopped. If the oil level is well below normal, it is necessary to pump down the system before further oil can be added. With the compressor running, oil should be visible in the lower half of the sight glass.

PUMP DOWN PROCEDURE

If the compressor is to be opened to add lubricating oil or to facilitate overhaul then it is necessary first to pump down the system. Proceed as follows:-

1. Start the compressor by the normal method and allow the system to operate for several minutes.

2. Close the compressor suction stop valve. The compressor will shut down under control of the low pressure cut-out.

3. As the crankcase pressure rises the compressor will re-start. Allow the compressor to cycle twice more under control of the low pressure cut-out, and then isolate the electrical supply and close the compressor delivery stop valve.

NOTE: If the ambient temperature is too low for starting under thermostatic control, start the equipment by operating the Cooling Test pushbutton, holding the button depressed for several minutes. Release the button and the compressor will shut down under control of the low pressure cut-out. Then isolate the power supply and close the compressor suction and delivery stop valves.

ADDING LUBRICATING OIL

1. After pumping down as described above, slowly release the oil filler plug in the pump end crankcase cover and allow the gas pressure in the crankcase to escape past the thread before removing the plug. Do not remove the plug until the oil is ready for pouring and do not decant oil into other vessels prior to adding to the compressor as this increases the risk of air and other impurities being absorbed.

2. Add the necessary quantity of oil from a sealed container using a clean funnel and tubing until the level is between 1/2 and 3/4 up from the bottom of the sight glass.

3. The filling operation should be carried out as quickly as possible to avoid contamination and the filler plug replaced loosely.

4. Crack open the compressor suction and delivery stop valves to pressurise the crankcase and purge any air that may have entered the compressor.

5. Tighten the oil filler plug and set both compressor stop valves in the normal operating position i.e. two turns off the back seat.

6. Start the compressor and check the oil level again after 20 minutes continuous operation.

CAPACITY CONTROL SYSTEM

The capacity control system employed on this compressor is a by-pass system where the gas from one cylinder head is by passed to the suction side of the other head. As this gas is by-passed at the suction pressure level where little work has been done the temperature is relatively cool. Operation of the unloading step is controlled by a 220 V. pilot solenoid valve actuated by a single pole low pressure

cut-out switch accommodated in the gauge and cut-out panel. The low pressure cut-out has a range of adjustment but is preset for optimum performance. For setting refer to the Equipment Data Sheets at the end of the manual.

INSPECTION AND MAINTENANCE

1. *The compressor unit should be examined at weekly intervals with the aid of a refrigerant leakage detection lamp to check that there are no refrigerant leaks present at pipe joints, valve glands, sight glass, terminal box and gauge line connections. The inspection should be carried out immediately after shut down following a duty cycle, when the condenser fans are not running to disperse refrigerant gas.*

2. *Every week, run the equipment for at least 20 minutes until all foaming of the oil in the crankcase has subsided,then check with the aid of a torch that the oil level visible through the sight glass is within the required levels.*

OVERHAUL

REMOVING COMPRESSOR

When a major overhaul of the air conditioning equipment is being carried out (say every 3 years) the compressor should be removed and thoroughly checked for signs of wear, replacing worn components as necessary. The three year period may be extended, depending on conditions observed at the time of overhaul and the duty periods of the equipment.

1. Pump down the system as previously described, close the suction and delivery stop valves, and isolate the power supply. Label the equipment controls accordingly.

2. Disconnect the wiring from the motor terminal box.

3. Remove the suction and delivery stop valve fixing bolts, easing the valves clear of the compressor, taking care not to damage the valve faces.

   Seal the exposed valve entries with masking tape or a tight wad of clean lint-free cloth to exclude dust etc., and similarly seal the compressor ports.

4. Remove the compressor fixing bolts and carefully raise the compressor clear of the unit.

TEST FOR LEAKING OPERATING VALVES

If the operating valves within the compressor cylinder heads leak, a reduction in system capacity and consequent increase in running times will result. If valve leakage is suspected the following test should be carried out:-

1. Connect a compound service gauge to the gauge port of the suction valve. Close the suction valve and run the compressor until a vacuum of 10-15 inches of mercury is indicated on the gauge.

2. Stop the compressor and crack the suction valve until the crankcase pressure returns to zero, then close the valve securely.

3. If the crankcase pressure continues to rise after the valve has been tightly closed, this indicates a leaking discharge valve and the valve plate assembly should be replaced.

4. Malfunction of the internal suction valves can be ascertained only by inspection of the valves after removal of the valve plates.

5. If valve plate replacement is necessary, securely close both the suction and delivery service stop valves and bleed the crankcase pressure to atmosphere.

6. Remove the cylinder heads. If the suction valve has failed, clean the top of the piston. If there are any sharp edges raised on the suction valve stop, they should be removed by the use of a small honing stone.

   NOTE: Care should be taken to ensure that grit or other foreign particles do not enter the crankcase.

7. Remove the old gaskets from the compressor and replace with new gaskets supplied with the replacement valve plate. Ensure that the new gasket is correctly positioned.

8. Replace the valve plate and cylinder head.

9. Purge and evacuate the compressor when it is reconnected into the refrigeration system as follows:

DEHYDRATION

After the compressor has been re-assembled and re-connected in the system it must be purged of air by the following method:

1. Disconnect the gauge line at the LOW pressure gauge.

2. Connect the gauge line to a vacuum pump and with the low pressure gauge valve fully open, dehydrate until an indicated vacuum gauge reading of less than 1 mm Hg can be maintained with the pump stopped.

3. Close the low pressure gauge valve, disconnect the vacuum pump and loosely re-connect the gauge line to the gauge. Open the compressor suction stop valve a few turns and open the low pressure gauge valve allowing the refrigerant gas to purge the air from the gauge connection. Whilst refrigerant gas is escaping tighten the union on the gauge.

4. Open the compressor suction and delivery stop valves to within two turns of the back seated condition and open the gauge valves only sufficiently to obtain a steady reading whilst the system is in operation.

PRECAUTIONS TO BE TAKEN IN THE EVENT OF A BURNT OUT MOTOR

1. In the event of the sealed compressor motor windings burning out, many products of combustion are formed, some of which are carbon, water and hydrofluoric acid.

2. These products are sometimes carried through into the refrigerant circuit, therefore, in the event of a motor burning out, it is necessary to discharge all the old refrigerant, dehydrate the system and to recharge with new refrigerant.

3. The hydrofluoric acid will be mixed with the oil in the compressor crankcase and also to some extent with the oil throughout the system. It is only in very rare instances that the concentration of hydrofluoric acid is great enough to present a problem. Even with high concentration of acid the amount that might be brought into contact with the skin

during the draining and dismantling of a sealed motor compressor unit is very small. However, some skins are quite sensitive to this acid and it is therefore advisable that care should be taken by everyone engaged on handling or dismantling a burnt out compressor unit to avoid prolonged contact. The hands should be washed with soap and water immediately afterwards.

PROCEDURE TO BE FOLLOWED AFTER A BURN OUT IN A SEALED MOTOR COMPRESSOR UNIT

1. Discharge the entire charge of refrigerant from the system. It is recommended that this be done whilst the car is in the open air to avoid a heavy concentration of gas in the workshop.

2. Remove the defective compressor unit.

3. Remove the filter-dehydrator cartridge.

4. Fit new compressor unit and check that it is charged with oil.

5. Purge system with dry Carbon Dioxide, or Nitrogen, following the procedure detailed in the section entitled Dehydration of Refrigeration System.

6. Fit a new filter-dehydrator cartridge.

7. Ensure that all gas is discharged then evacuate and dehydrate the complete system by means of the vacuum pump. Break the vacuum with refrigerant R12 and purge system with it for about 10 seconds.

8. Ensure that all gas is discharged, re-evacuate the system using the vacuum pump and then charge the system with its normal charge of R12 immediately the vacuum has been attained.

9. Run the complete equipment continuously or intermittently for a total of six hours. Pump down and remove the filter dehydrator cartridge and replace it with a new one.

   Drain the oil from the compressor and replace with fresh oil. Ensure that all air is purged from the crankcase before replacing the oil filler plug.

10. After the equipment has been in normal operation for a time equivalent to about 48 hours running time, the oil should be checked and if it is discoloured it must be replaced with fresh oil. Check again after two weeks service.

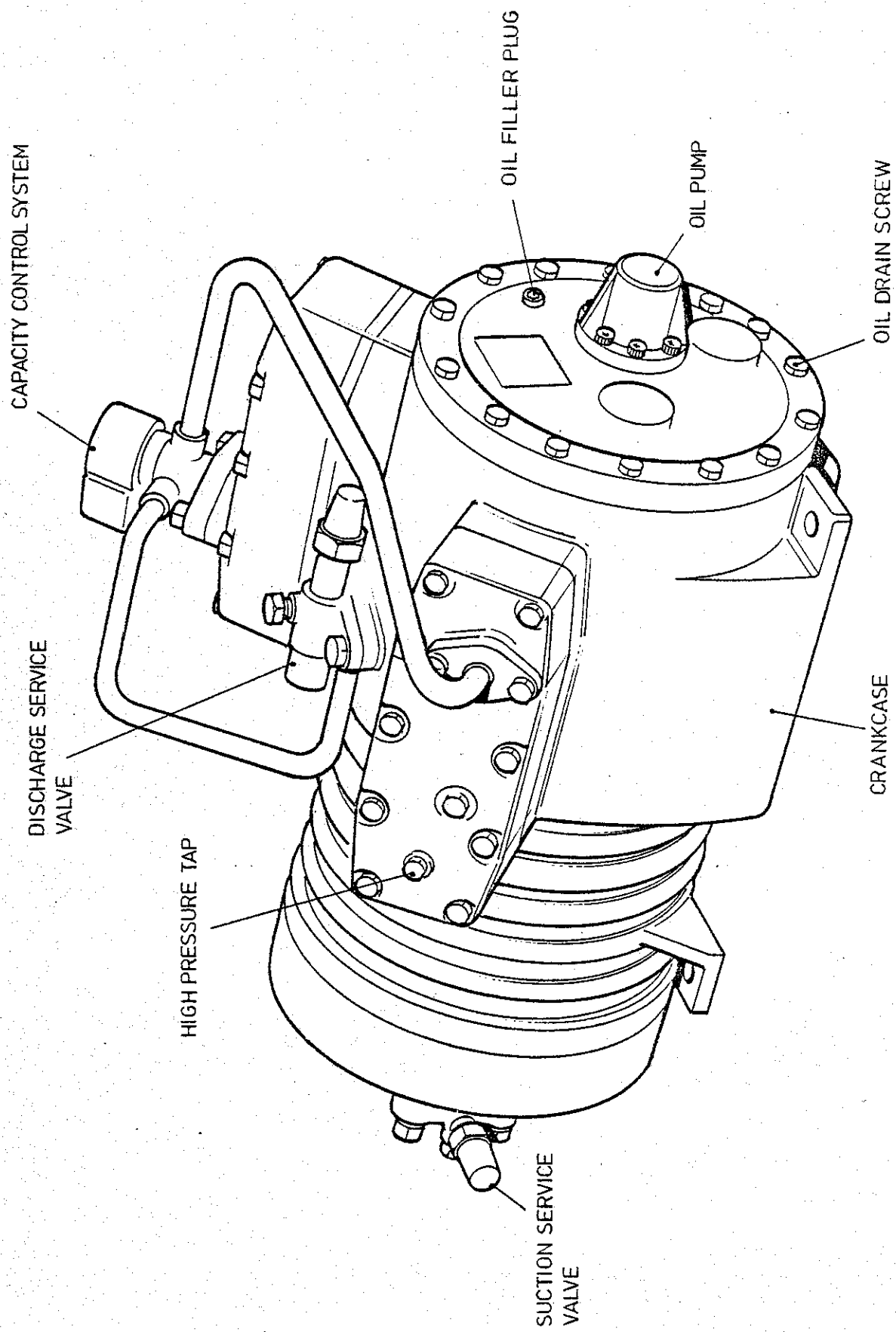

8568	DUNHAM BUSH COMPRESSOR 75 UPH5(Q) WITH CAPACITY CONTROL	SECTION 4
		FIGURE 1

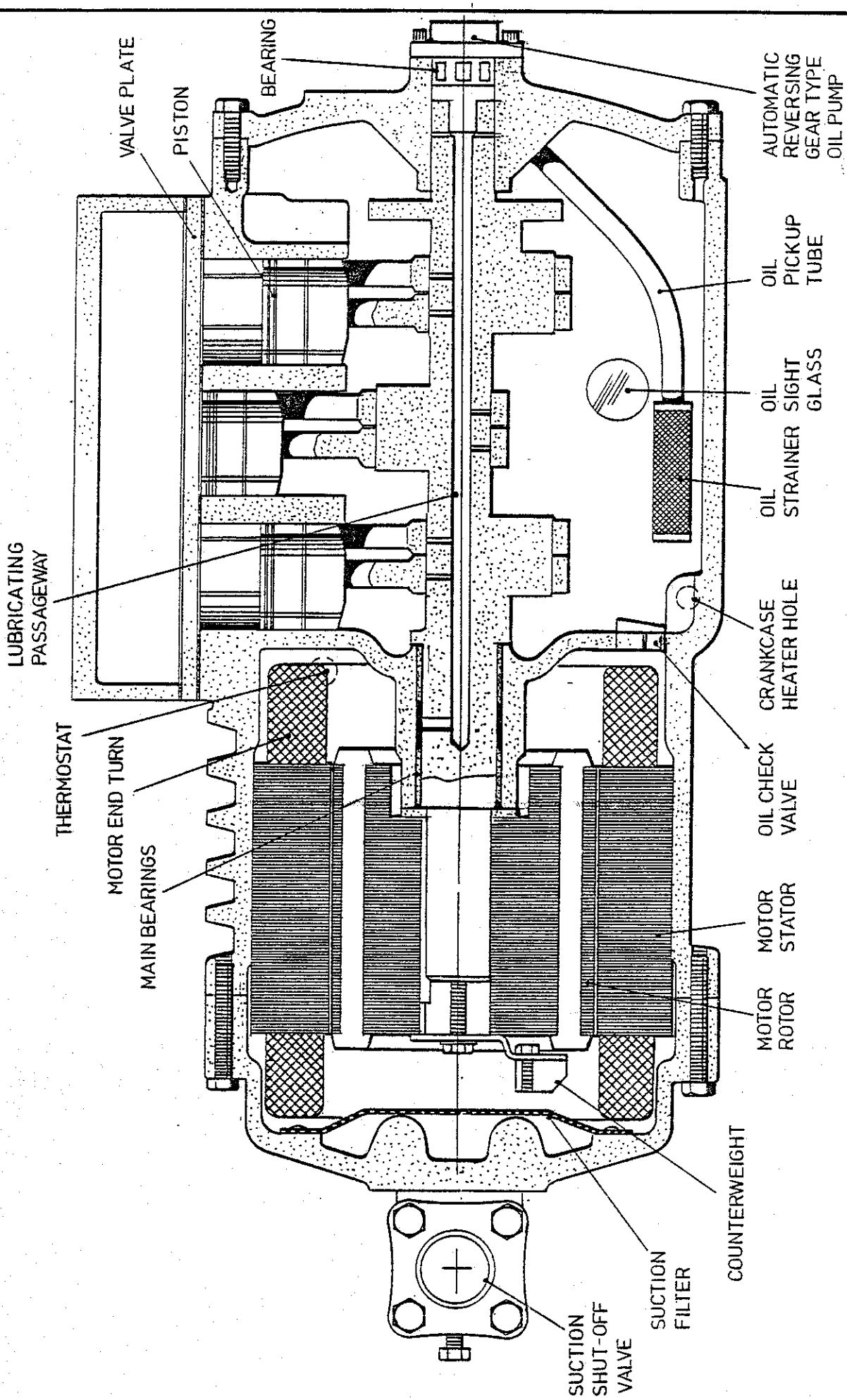

SECTION THROUGH TYPICAL DUNHAM BUSH COMPRESSOR

SECTION 4

FIGURE 2

8569

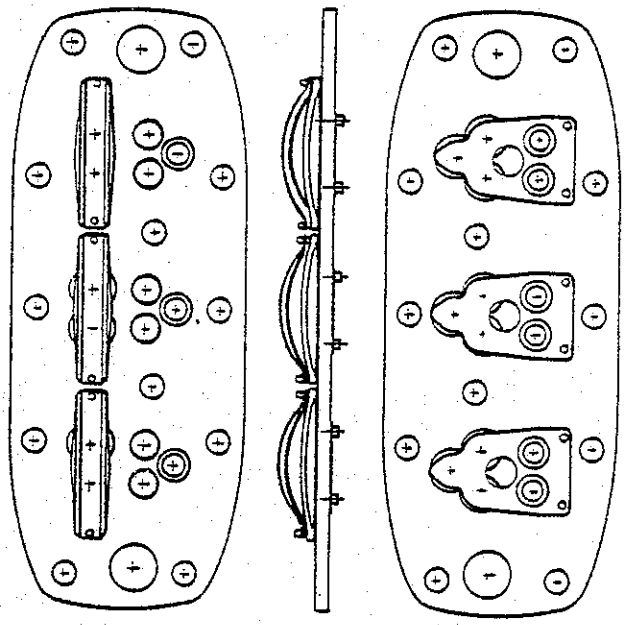

UNLOADING VALVE PLATE

NON-UNLOADING VALVE PLATE

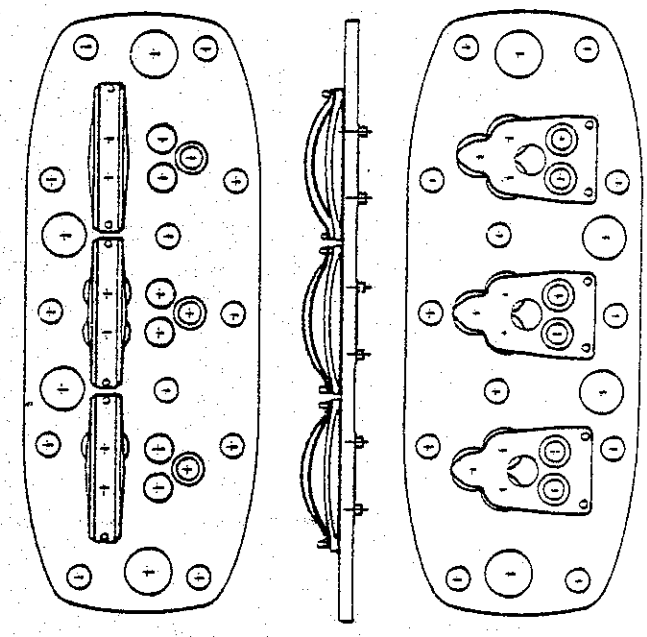

HEAD TO PLATE GASKET

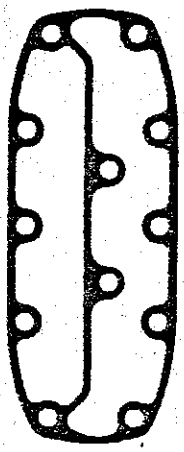

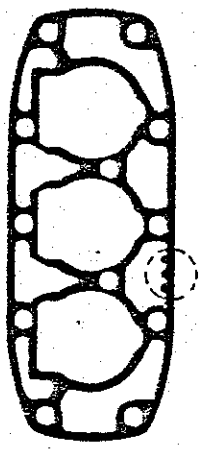

DECK TO PLATE GASKET

8570	VALVE PLATES AND GASKETS FOR DUNHAM BUSH COMPRESSORS	SECTION 4 FIGURE 3

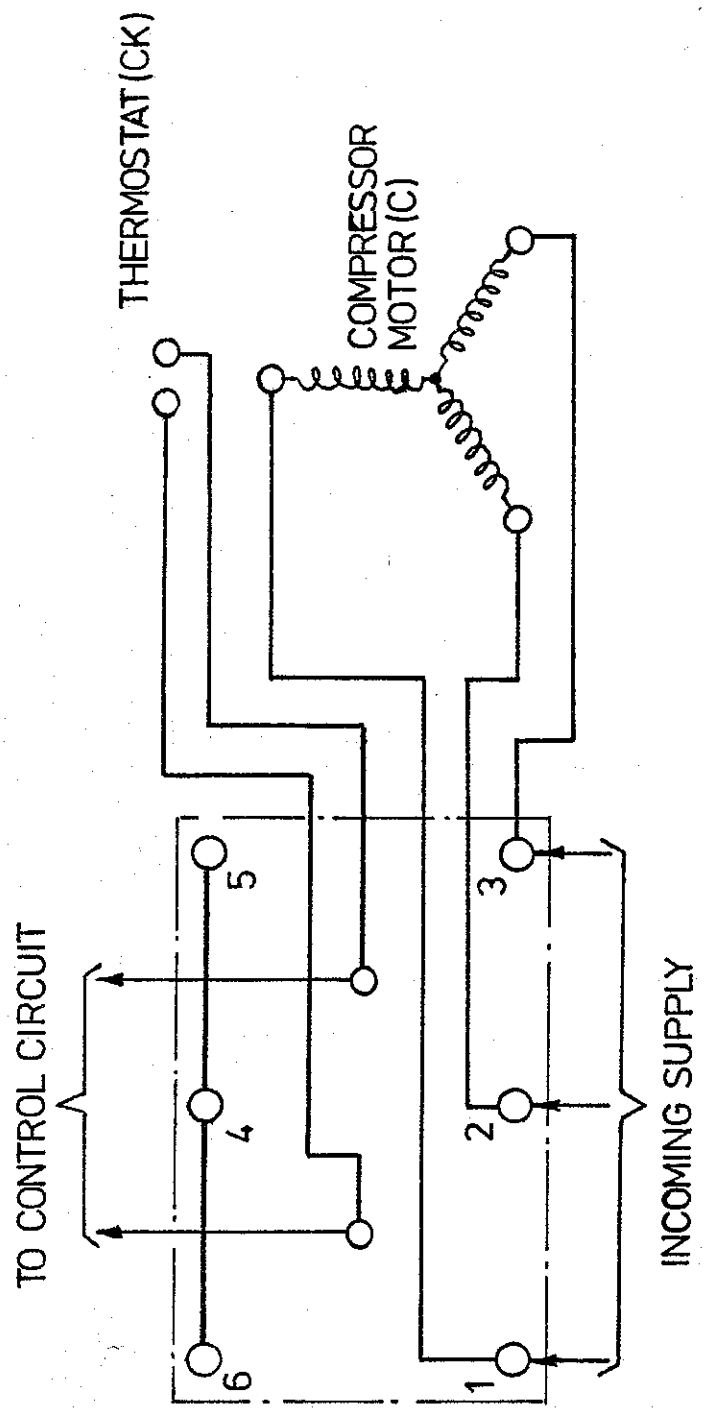

8607	COMPRESSOR MOTOR CONNECTIONS	SECTION 4
		FIGURE 4

SECTION 5

CONDENSER, LIQUID RECEIVER AND DEHYDRATOR FILTER

Illustrations

CONDENSER, LIQUID RECEIVER AND REFRIGERANT FILTER

CONDENSER

The condenser coil consists of an assembly of 3/8" O/D copper tubes threaded through and expanded into aluminium plate type cooling fins spaced at approximately 3 mm to form a compact assembly. The coils are connected to 1 3/8" copper headers with 1 1/8" inlet and 7/8" outlet.

Air is drawn through the coil assembly by a 24" axial type fan powered by a 1.865 kW air stream rated motor with environmental protection to category IP55 providing adequate protection from ingress of moisture. Motor details are given in the Equipment Data Sheets.

LIQUID RECEIVER AND FILTER UNIT

The liquid receiver is sited adjacent to the compressor and comprises a horizontally mounted cylindrical steel shell equipped with two sight glasses for observing refrigerant level. Under normal operation the liquid level should be visible within the lower sight glass. Illuminating the upper sight glass with a portable lamp will assist viewing of the level. The receiver is fitted with a purge valve, refrigerant charging valve and an outlet valve connected to the filter unit.

The filter unit mounted above the liquid receiver is connected in the liquid refrigerant pipe line and contains a filter dehydrator cartridge which should be replaced after the initial run-in period and at any time when the refrigerant circuit is opened for repair.

Renewal of Filter Cartridge

NOTE: Do not remove the new filter cartridge from its sealed container until instructed below.

Procedure

1. Pump down the refrigerant into the liquid receiver by following the instructions given in Section 3 under the heading 'System Pump Down Procedure'.

2. Loosen and remove the fixings which secure the cover of the filter casing. A little refrigerant gas will escape

when the cover gasket seal is broken. Should the cover not release easily, insert a screwdriver blade into the joint and carefully ease off the cover.

3. Remove the existing filter cartridge and retaining spring using a piece of wire with a hook formed if necessary.

4. Check that no residue or foreign particles remain inside the filter shell and ensure that the gasket mating surfaces on the flange and cover plate are clean and smooth. It is recommended that a new gasket is used on re-assembly.

5. Remove the new filter cartridge from its sealed container and immediately insert it into the shell refitting the retaining spring, gasket, cover plate and fixing bolts. The fixings should not be tightened at this stage.

6. Energise the liquid line solenoid valve by connecting a temporary 220 volt A.C. supply across pins T3 and T1 of the test socket for a few seconds to purge the liquid line from the loose cover joint, then switch off and disconnect the temporary supply.

7. Crack open the liquid receiver outlet valve to purge the filter housing, and then tighten the cover fixings securely whilst gas is escaping. Tighten the fixings evenly and in rotation.

8. Fully open the liquid receiver outlet valve and check that the compressor suction and delivery valves are fully open.

9. Start the equipment and allow to run for about 20 minutes. Switch off the supply and test the cover joint and valve glands by means of a refrigerant leak detection lamp.

INSPECTION AND MAINTENANCE

The refrigeration equipment should be examined at weekly intervals with the aid of a refrigerant leak detection lamp after shut down immediately following a duty period, to check that there are no leakages present at the condenser and liquid receiver pipe joints, filter unit, valve

stems and sight glass joints.

The surface of the condenser coils should be checked at about six monthly intervals, looking for coil damage and obstructions to the air passage. Light surface dirt may be removed with soft bristle brushes and a compressed air jet. Heavy deposits can usually be removed using a fine high pressure water jet with soft brushes.

At periods of major overhaul with the unit removed from the car the water jet should be directed at the coil from the inside face whilst removing heavy deposits with the brush.

On no account should wire brushes be used as this will result in damage to the cooling fins.

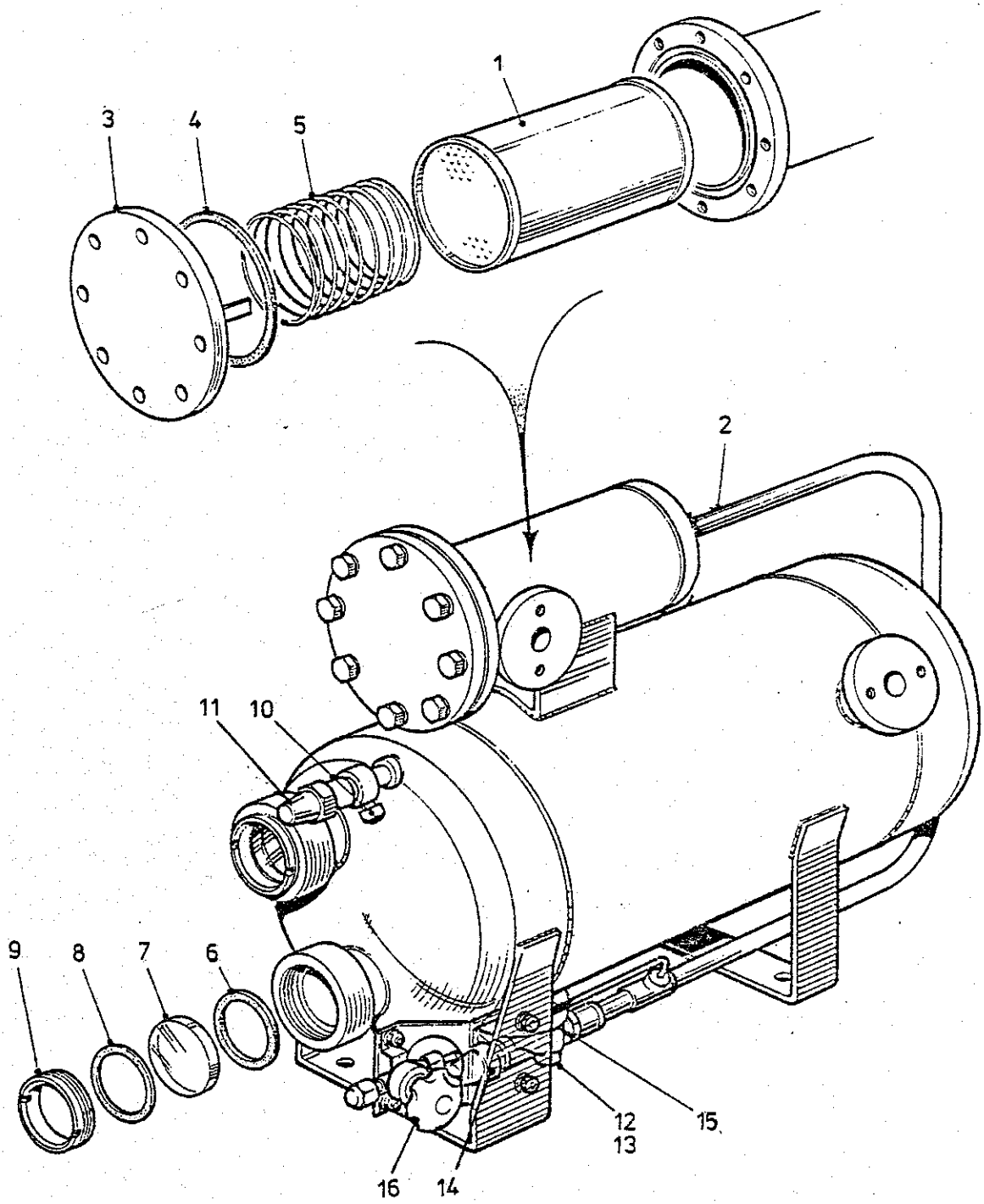

1	DEHYDRATOR CARTRIDGE	9	GLAND
2	COPPER TUBE	10	FLARE CAP
3	COVER ASSEMBLY	11	PURGE VALVE
4	GASKET	12	LOCKWASHER
5	SPRING	13	SCREW
6	WASHER	14	STOP VALVE
7	SIGHT GLASS	15	GASKET
8	FIBRE WASHER	16	CHARGING VALVE

8614

LIQUID RECEIVER AND FILTER
WITH SYSTEM CHARGING VALVE

SECTION 5

FIGURE 1

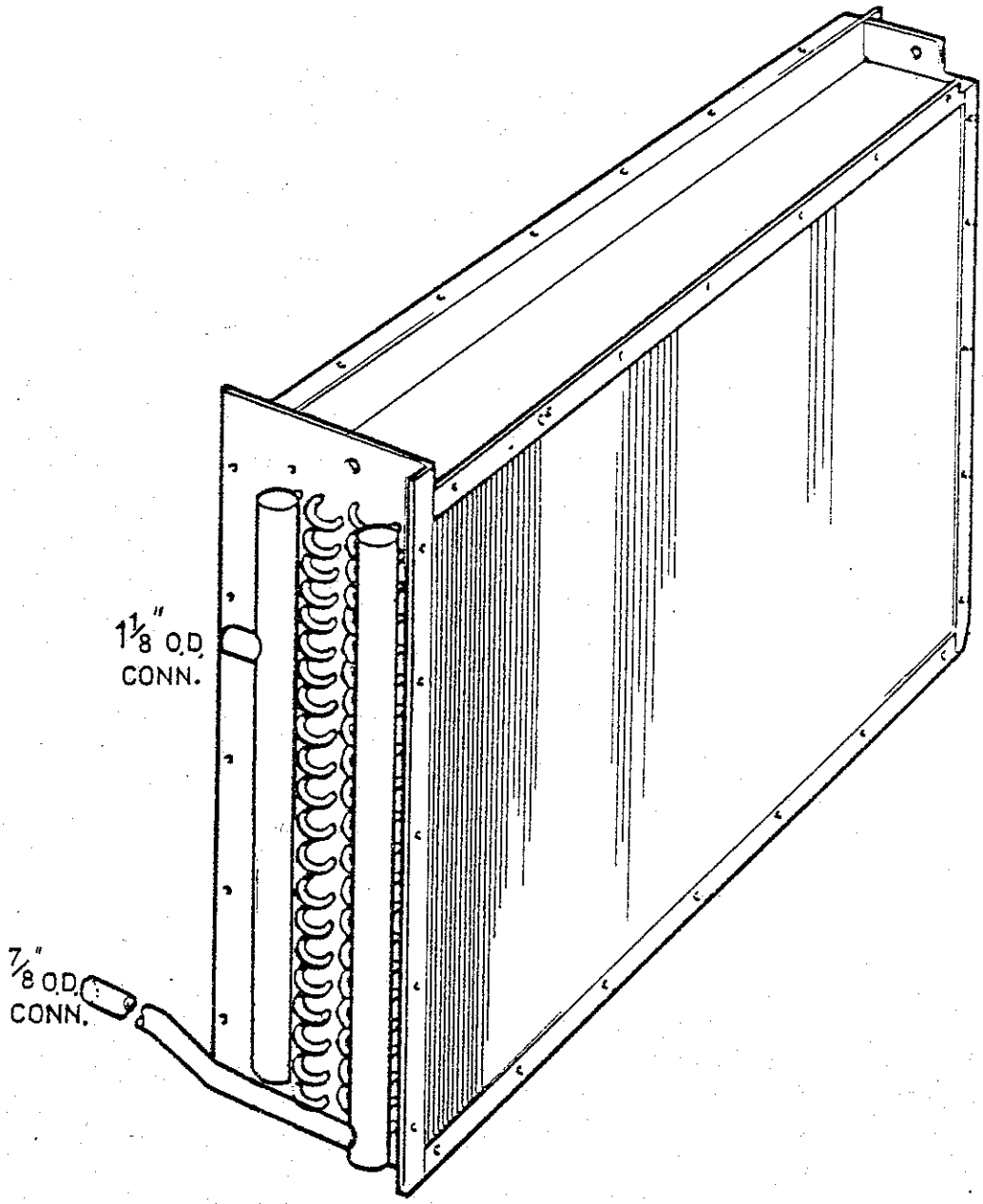

8615	CONDENSER COIL UNIT	SECTION 5
		FIGURE 2

SECTION 6

EVAPORATOR UNIT AND THERMOSTATIC EXPANSION VALVE

Illustrations

EVAPORATOR UNIT AND EXPANSION VALVE

EVAPORATOR

The evaporator consists of an assembly of 3/8" O/D copper tubes expanded into aluminium fins spaced at approximately 3 mm. The coils are arranged to form twenty two circuits of six tubes per circuit connected to 1 3/8" O/D headers.

The unit is equipped with a 5/8" O.D.F. inlet connection on the expansion valve attached to the 22 circuit distributor. Vapour returns to the compressor via a 1 3/8" O.D.F. suction line connected at the lower end of the evaporator. Condensate extracted from the circulated air collects in a drip tray located below the coil assembly and is piped to waste via three special condensate water traps.

Air is drawn through the air filter cartridges and over the evaporator coil by a centrifugal fan which is driven by 1.5 kW totally enclosed, fan cooled motor with environmental protection to category IP 55 providing adequate protection from ingress of moisture. Motor details are given in the Equipment Data Sheets.

EXPANSION VALVE

The evaporator coil is equipped with a thermostatic expansion valve to meter the flow of refrigerant into the coil in exact proportion to the rate of evaporation in the coil, thereby preventing the return of any refrigerant in liquid form to the compressor. The valve is operated by the pressure differential between the vapour pressure in the evaporator and the pressure of the selected charge in the thermal bulb. Since the bulb is in thermal contact with the suction line, the pressure in the bulb is a function of the suction line temperature. As the valve operates on a pressure differential it cannot be set to produce a fixed evaporator pressure. Under action of the thermostatic valve the evaporator pressure will vary directly as the load. The valve is preset and adjustment is not recommended.

The valve is provided with an equaliser connection, connected to the evaporator outlet pipe on the compressor side of the remote bulb and as close to the bulb as possible, to compensate for any pressure drop through the evaporator coil. See figures 1 and 3.

INSPECTION AND MAINTENANCE

Evaporator

The evaporator coil assembly pipe connections should be inspected at regular intervals, together with the remainder of the refrigeration system, with the aid of a refrigerant leak detection lamp to check that there are no leakages present at the various joints in the pipework.

At times of major overhaul the complete equipment should be removed from the car to permit access to be gained for cleaning the evaporator coil surfaces. This cleaning operation should be carried out using soft bristle brushes and a fine nozzle high pressure water jet. Cleaning of the evaporator coil and adjacent surfaces in the conditioned air stream is essential to prevent a build up of dirt on the surfaces which could cause unpleasant odours. See also Section 14 for renewal of air filter units.

Expansion Valve

There is no routine maintenance required on this item, and any fault in the operation of the equipment is not usually attributable to the valve. The setting of the flow rate controlled by the expansion valve is established during manufacture and checked on commissioning and should require no further attention. It should be checked that the phial connected to the capillary tube is clamped in secure metallic contact with the suction line. However, if the internal components of the valve stick due to the ingress of foreign particles into the system, the valve can be dismantled for cleaning or replacement of the flat seat valve components. Should dismantling be necessary, after pumping down the system carefully remove the bottom cap assembly complete (without removing the seal cap) to expose the internal components. Refer to figure 3 for details of the valve. The system should be purged free of any air that may have entered the pipework before re-commissioning.

AIR CONDITIONING FAN AND MOTOR UNIT

Apart from occasional greasing of the motor bearings (Section 13) there is no routine maintenance required on the fan and motor unit between periods of major overhaul, but in the event of motor failure it would be necessary to remove the centrifugal impeller from the motor shaft before the motor can be removed. The impeller is secured to the shaft with a Fenner taper lock bush and driving key, and the following procedure should be adopted. See Figure 2.

1. Release the fixing screws from the top cover of the transition duct which connects the fan case to the rear face of the heater bank and remove this cover.

2. Remove the air inlet venturi cone from the front of the fan case.

3. To remove the impeller slacken the two hexagon socket set screws in the fan coupling by several complete turns and remove one screw completely. Insert one screw into the jacking off hole after first oiling the thread and point of the screw. Tighten this screw with the aid of a hexagon wrench until the bush is loosened in the hub, then withdraw the impeller from the motor shaft ensuring that the driving key is not misplaced.

4. With the power supply isolated disconnect the motor supply cables and conduit from the motor terminal box.

5. Remove the nuts and lockwashers securing the motor to the outside of the fan case and lift off the motor.

Re-assembly Procedure

1. Fit the motor to the fan case with the correct nuts and washers, tightening the nuts to the torque figures given in Section 1.

2. Re-connect the conduit and motor wiring in accordance with the unit wiring diagram included in Section 15.

3. With the two socket set screws loosely inserted in the original holes (threaded in the outer member of the

coupling) and sparingly lubricated, ensure that the shaft and hub are completely clean and free from oil or dirt, and that the driving key is fitted in the motor shaft extension.

4. *Slide the impeller on the shaft and locate the impeller exactly as shown in the illustration (Fig 2). Remember that the bush will nip the shaft first and then the hub will be drawn onto the bush.*

5. *Using a hexagon wrench gradually tighten the two screws evenly until both screws are very tight.*

6. *Re-check the locating dimension between the face of the fan case and the back plate of the impeller as it is essential to operate the fan with a minimum clearance between the inlet cone and the front face of the fan.*

7. *Refit the inlet cone and check again to ensure that the fan does not touch the cone when the fan is revolved. If they do touch it is necessary to release the taper lock bush again as previously described and reset the location of the fan assembly.*

8. *Refit the top cover to the transition duct using the correct torque when tightening the screws.*

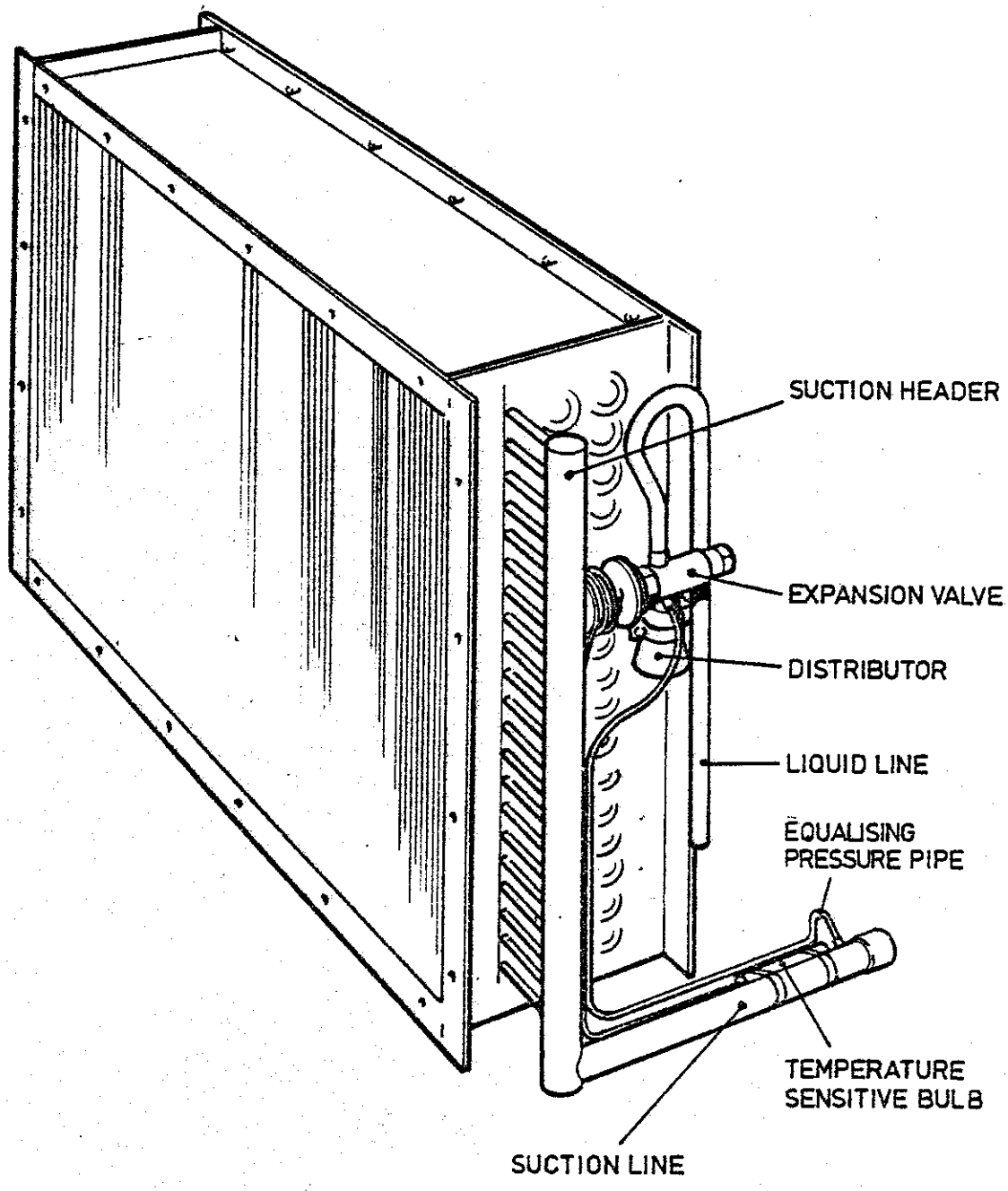

8616	EVAPORATOR	SECTION 6
		FIGURE 1

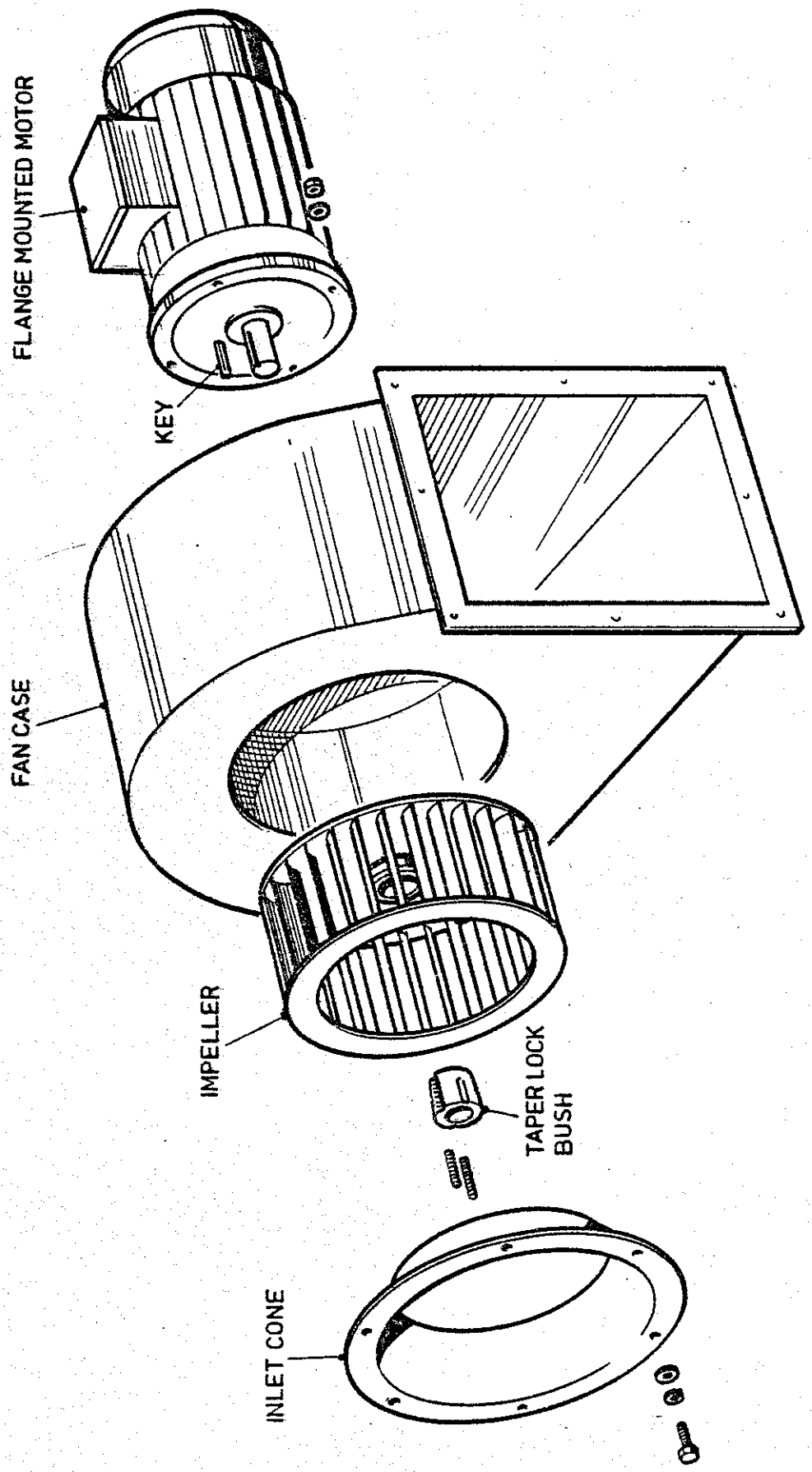

EVAPORATOR FAN AND MOTOR	SECTION 6
	FIGURE 2

8617

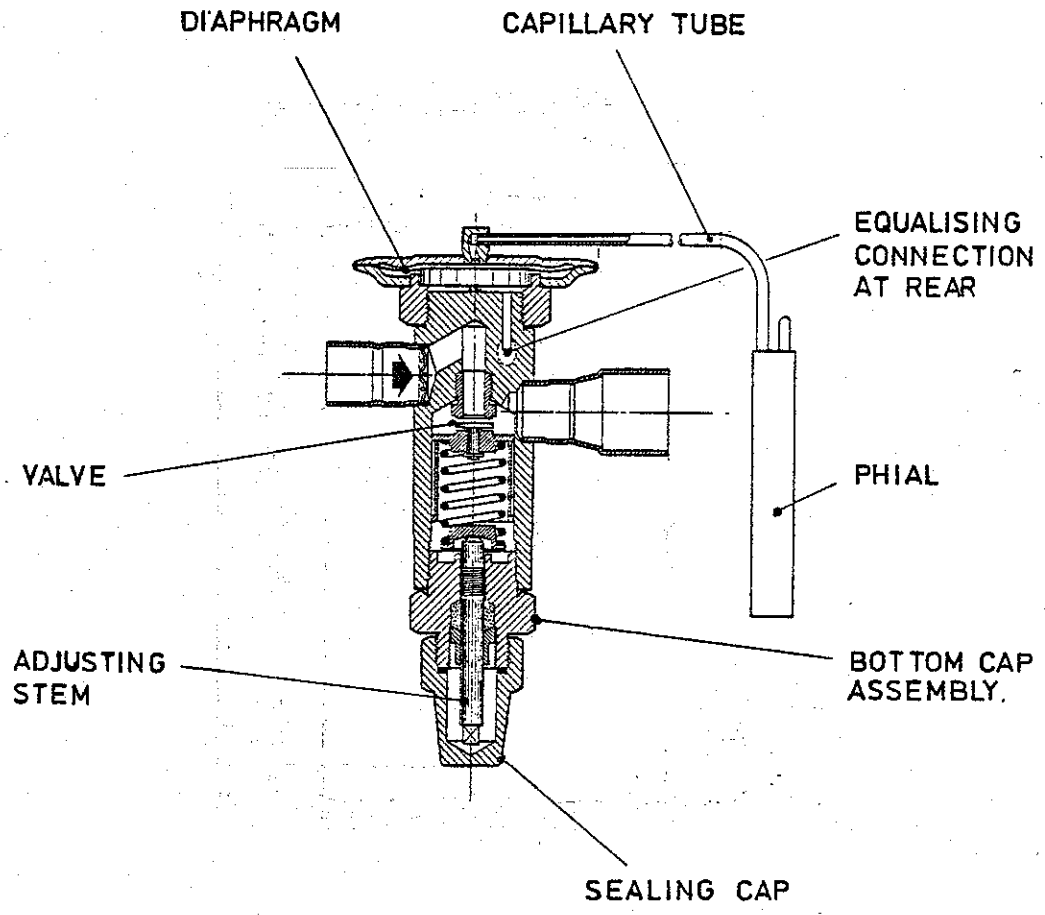

THERMOSTATIC EXPANSION VALVE TYPE 'P'	SECTION 6
	FIGURE 3

8618

SECTION 7

REFRIGERATION PIPEWORK

REFRIGERATION PIPEWORK

Repairs to the refrigeration system pipework are permissible, using the undermentioned approved materials and techniques.

A. Materials

1. Piping

Only refrigeration quality copper tubing manufactured from phosphorous de-oxidized non-arsenical copper conforming to BS 1172 and comprising outside diameter tubes to BS 2871 in the following sizes.

1/4" O/D x 20 SWG	Note:	All piping must be solid drawn, fully annealed, degreased and internally clean. End seals must be fitted to prevent ingress of dirt and moisture.
5/8" O/D x 18 SWG		
7/8" O/D x 18 SWG		
1 3/8" O/D x 18 SWG		

2. Brazing Alloys

Cadmium free brazing alloys should be used for making all tubing and fitting joints, the two alloys recommended being as follows:

a. Low silver alloy to BS 1845 grade CP4 (e.g. Stubbs 35R) with melting range of 650-710°C.

b. 55% silver alloy to BS 1845 grade AG14 (e.g. Solder Products "Easy Braze 55T") with melting range of 630-660°C.

Use grade CP4 alloy without flux when making copper/copper joints.

Use grade CP4 alloy with a compatible flux (e.g. Stubbs A.G.S.) for copper/brass joints.

When brazing expansion valves and distributors into evaporator coil assemblies the AG14 alloy is recommended, using a compatible flux such as "Easy Flow".

Both of these alloys have a short plastic range enabling them to flow suddenly and completely, and to penetrate rapidly into the small joint clearances. They are available in various sizes, the most convenient being 1.5 mm dia. rods in 500 mm lengths.

B. Procedure

1. Cut the tube at right angles with a fine hacksaw. (Use 32 tooth saw preferably). For pipe sizes below 3/4" (19.05 mm) dia. a standard pipe-cutter may be used. Remove burr.

2. Using Sandcloth, Sandpaper, or Steel Wool, thoroughly clean outside end of copper pipe equal to depth of fitting. Leave no dark spots.

3. Using Sandcloth, Sandpaper, or Steel Wool, thoroughly clean inside of fitting where pipe is to be inserted.

4. Mix a quantity of the appropriate flux with sufficient water to form a thin paste. Mark the depth to which the pipe goes into the fitting, then apply the paste with a brush to half of this depth farthest from the end of the copper pipe and not inside the fitting.

5. Insert the tube into the fitting as far as it will go, and rotate it to ensure even distribution of the flux to the fitting.

6. Use grade CP4 solder (and flux where necessary as described above) for all joints except where two joints are in close proximity or where the use of flux is deprecated.

7. The torch must be capable of easily heating the largest joints to a dull red. A slightly oxidising flame from a mixture of L.P.G. and compressed air is recommended; the envelope of the flame should be used (not the cone as in welding). If L.P.G. and compressed air are not available, any suitable gas mixture (e.g. oxygen/acetylene)

may be employed. Play the flame on the fitting and keep moving it around the work to ensure uniform heat distribution, at the same time using a heat resistant screen to supply back heat. Fluxes usually fuse slightly below the melting point of the solder and fusion of surplus flux serves as a useful guide to the temperature attained.

Shortly after fusion is observed, begin to apply the brazing rod tentatively at any convenient point on the edge of the joint, but avoid placing it directly in the flame.

When the proper temperature is reached the solder will melt on contact and be drawn freely into the joint by capillary attraction. Continue playing the flame around the fitting but concentrate the heat progressively further from the point at which solder is being fed; the molten metal tends to flow towards the hotter areas. If the flame is properly manipulated the solder should disappear into the joint as fast as it melts, forming a continuous bond which should be visible at the exposed end. With a little practice it is possible to sense at once when the joint is full, but the length of the solder rod consumed can be used as a rough guide. Excessive application of solder may cause a surplus to run outside the fitting. This should be wiped off quickly whilst it is still hot. Extra care is necessary, however with vertical or inclined joints, where the concealed end is at a lower level than the point of feed; in such cases surplus solder may flow into the fitting and cannot be detected or removed.

8. Immediately after the silver solder has set, a very wet cloth should be applied and wiped round the joint to remove the flux, since if it is left it becomes glass hard but after being subjected to any

humidity it softens and creates corrosion round the joint. Also if flux is left on it could quite easily seal any minute blow hole that may be in the joint, and would successfully stand up to a pressure test. It is, therefore, very important that all flux be removed from all joints after soldering.

9. If any ends of tubing are distorted due to tube bending operations or accidental damage after being cut to length, be sure to size them with a sizing tool to ensure a correct fit in the pipe fitting before making the soldered joint.

10. TOOLS NEEDED:-

Brazing torch and gas supply
File, 10" second cut, and scraper
Solders to BS 1845:1977, grades CP4 and AG14 with compatible fluxes
Hacksaw (32 tooth blade)
Mitre box or equivalent
Medium or No. 1 Sandcloth, Sandpaper, or Steel Wool
Sizing Tools
Pipe Cutter
Insulated Heat Shield

11. PRECAUTIONS:-

(a) Do not cut pipe on an angle. A mitre box or equivalent is recommended.

(b) Do not try to solder dirty joints. Clean thoroughly with sandcloth, sandpaper, or steel wool.

(c) Do not use other than recommended solder and flux.

(d) Avoid excessive temperatures or prolonged heating. Either tends to reduce the

efficiency of the flux and cause changes in the solder alloy by loss of its more volatile constituents.

(e) When making soldered connections to valves, ensure that they are partly open and keep the valve body cool by applying cloths soaked in water.

FLARE JOINTS

To make a flared connection, proceed as follows:

1. Cut the end of the pipe square and remove any rough edges.

2. Anneal the pipe end and ensure that the pipe is cleaned after annealing.

3. Slide the flare nut onto the pipe and fit the pipe in a flare tool clamp leaving 3.5-5 mm of pipe protruding into the chamfered portion of the tool. Fit the forming tool in position and screw down to form the flare.

4. Remove the pipe from the flare tool and check the flare in the nut to ensure that good seating is obtained. If satisfactory anneal and clean the flare.

5. Always use two spanners when tightening flare connections to avoid strain on the pipework.

SECTION 8

TESTS FOR SYSTEM LEAKAGE

TESTS FOR SYSTEM LEAKAGE

GENERAL

The system is charged with refrigerant R12 before despatch, but if it has been opened to effect a major repair or component replacement it is essential to pressure test and dehydrate the system to ensure efficient operation by checking that there are no leakages present and that the system is completely dry and all air is evacuated before refrigerant is added.

The following procedures assume that all refrigerant has previously been discharged from the system.

In order to allow the pressure tests to be effective throughout the system it is necessary to energise the liquid line solenoid valve by applying a temporary 220 volt A.C. supply across pins T1 and T3 of the test socket. This supply should remain energised for the duration of pressure testing, system dehydration and adding of refrigerant charge.

The pressure test is carried out using nitrogen or carbon dioxide together with a small quantity of refrigerant R12. Under no circumstances should oxygen, atmospheric air or gas which is not thoroughly dry be introduced into the system.

Procedure

1. Fully open the compressor suction and delivery stop valves.
2. Fully open the liquid receiver outlet valve and check that the liquid receiver purge valve is fully closed but leave off the valve stem sealing cap.
3. Fully open both valves in the pressure gauge lines.
4. Fully close the refrigerant charging valve and remove the valve outlet sealing cap.
5. Connect an R12 refrigerant cylinder to the charging valve via a charging manifold, using a 1/4" SAE flare connection.

6. *Open the clyinder, manifold and charging valves and admit 1-1.5 kg of refrigerant into the system, then close the manifold and cylinder valves.*

7. *Disconnect the R12 cylinder and connect a cylinder of nitrogen (or the specified alternative) equipped with a pressure reducing valve via the manifold.*

8. *With the pressure reducing valve set to minimum pressure open the cylinder and manifold valves and adjust the reducing valve to 10.5 kg.cm^2 (10 bar). Allow the system pressure to build up to this reading and close the cylinder and manifold valves.*

9. *Make a thorough test of <u>all</u> joints in the system, passing the suction tube of a refrigerant leak detector slowly and carefully over every flanged, flared and soldered joint in the system. Check all valve glands, sight glasses and connections to thermostatic expansion valve and pressure cut-out switches.*

10. *With the gas cylinder and manifold valves closed, allow the system to remain at this pressure for 24 hours to ensure that the system is leakproof and no pressure loss is observed.*

11. *When the system has been satisfactorily tested at 10.5 kg/cm^2 close the low pressure gauge valve securely, open the gas cylinder and manifold valves.*

12. *Adjust the pressure regulator to increase the gas pressure to 17.6 kg/cm^2 (17.25 bar), allow the system pressure to build up to this reading, then close the gas cylinder and manifold valves.*

13. *Re-check the system for leaks as described in 9. above.*

14. *Allow the system to remain at this pressure for 30 minutes minimum observing that no pressure loss has occurred.*

15. *When the system is considered gas-tight at this pressure it can be dehydrated and charged with refrigerant as described in Sections 10 and 11.*

16. *On completion of the pressure test disconnect the nitrogen cylinder from the manifold and release the gases from the system to atmosphere via the charging valve.*

17. *Fully open the low pressure gauge valve and switch off the solenoid supply.*

18. *Refit the liquid receiver purge valve sealing cap.*

SECTION 9

OPERATION OF REFRIGERANT LEAK DETECTOR

OPERATION OF REFRIGERANT LEAKAGE DETECTION LAMP (GAS BURNER)

When the lamp is in operation, air is drawn through the flexible suction tube into the burner, and provided the air is pure, the flame will be pale and non-luminous.

The presence in the air of even a minute quantity of refrigerant gas, will cause the flame to change colour immediately to a characteristic green or blue, depending on the concentration.

PRECAUTIONS

1. Make certain the surrounding atmosphere is free from vapours such as Trichloroethylene or Carbon Tetrachloride, etc., which are capable of giving a flase impression of a refrigerant leak by causing the flame to change colour.
2. Do not pump pressure into the lamp container in an atmosphere polluted with gases or refrigerant vapour which would colour the flame, or store the lamp fuel in such atmosphere.

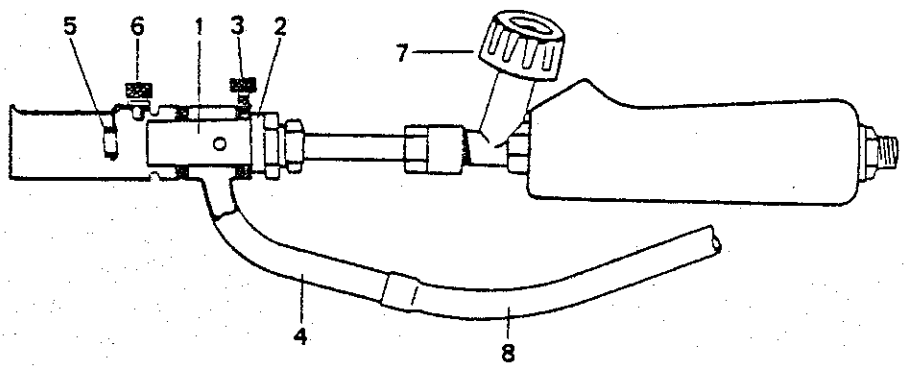

INSTRUCTIONS FOR USE

Assembly

Slide the leak detector onto the burner (1) until it bears against the screwed joint (2) of the burner tube, and fasten it with the locking screw (3). Fit the plastic tube (8) onto the suction pipe (4) of the detector.

Lighting

The size of the flame is regulated with the regulating knob (7). When the knob is opened, the air present in the hose will escape first so that it will take a few seconds before the burner can be lit, particularly in the case of smaller burners. When lighting burners which operate at high gas pressure (e.g., direct gas container pressure without gas regulator), open the regulating knob (7) slowly and light the gas as soon as it begins to escape.

Localising Leaks

Fix the catalyst (5) in position using the catalyst screw (6). Light the burner. Adjust the flame using the control knob (7) so that the tip of the inner cone of the flame is about 6 mm. above the catalyst (5). The catalyst metal will then turn a dull red. Move free end of the suction tube (8) of the detector slowly along the refrigerant gas pipes being checked. Any gas leakage, even in infinitesimal quantities, will quickly be drawn up to the flame which turns an unmistakable green and flickers up. The intensity of the green colour gives an approximate indication of the size of the leak.

SECTION 10

DEHYDRATION OF REFRIGERATION SYSTEM

DEHYDRATION OF REFRIGERATION SYSTEM

After the system has been satisfactorily tested for leakage it is necessary to dehydrate the complete system prior to adding refrigerant. This operation requires the use of a vacuum pump capable of drawing a vacuum down to a pressure not exceeding 1 mm Hg.

The use of a two stage vacuum pump is advised and the recommended pump is driven by vee belt and pulley from a single phase motor supplied on a common baseplate. The standard motor voltage is 200/240 volts single phase 50 Hz.

Lubricating oil for a vacuum pump is normally supplied separate from the pump, and it is necessary to follow the pump instructions cocerning the addition of oil. Only the recommended vacuum oil should be used for this purpose, otherwise serious damage may occur and the guarantee would be nullified. Under no circumstances should a vacuum pump be run without lubricant.

Procedure

1. Connect the vacuum pump to the charging valve on the liquid receiver via a manifold equipped with a vacuum gauge.
2. Energise the liquid line solenoid valve with the temporary single phase supply across terminals T1 and T3 as described in the section covering pressure tests.
3. Check that the compressor suction and delivery service valves and the liquid receiver outlet valve are fully open, and the purge valve and charging valve are fully closed.
4. With the ballast valve on the pump fully open, start the pump and evacuate the air and moisture from the pump to the manifold. This will quickly establish that the pump is operating correctly and that no leakage is present in this section of pipework as the maximum vacuum will be established within a few seconds.

5. *Open the charging valve to allow the pump to commence evacuating air from the system. After approximately 10 minutes operation the vacuum gauge will begin to indicate a partial vacuum and repeated readings should be taken until it indicates a constant reading of 1 mm Hg or less for a period of one hour.*

6. *Allow the pump to continue running whilst preparations are made to charge the system with refrigerant as described in the following section. When the equipment is ready for charging, close the vacuum pump connection on the manifold, stop the pump and disconnect the pump from the manifold.*

NOTE: Do not attempt to dehydrate the system by this method in an ambient temperature below 4.5°C as moisture in the system may freeze in conditions below this temperature. If the ambient temperature cannot be raised above this temperature, the vacuum pump will need to be run for an extended period whilst pockets, elbows and other points in the system where moisture may lodge are heated externally with a blow lamp. Care must be exercised not to apply excessive heat to any fittings which are joined with soft solder.

SECTION 11

CHARGING THE SYSTEM WITH REFRIGERANT

CHARGING WITH REFRIGERANT

Before charging with refrigerant the system must be evacuated and dehydrated by means of a vacuum pump as previously described.

The importance of thorough dehydration the system cannot be over emphasised as it is of significant contribution towards ensuring reliability of the equipment over long periods of operation.

Having established a gas-tight and dehydrated system, charging with refrigerant should follow immediately.

The correct refrigerant charge for the UP32 unit is 13.6 kg (30 lb) of R12.

CAUTION: ATTENTION IS DRAWN TO THE WARNING GIVEN IN SECTION 3 CONCERNING HANDLING OF REFRIGERANT. IT IS RECOMMENDED THAT PROTECTIVE GLOVES ARE WORN WHEN MAKING CONNECTIONS TO THE R12 CYLINDER AND ASSOCIATED CONNECTIONS TO THE AIR CONDITIONING UNIT TO PREVENT ACCIDENTAL CONTACT WITH LIQUID OR GASEOUS REFRIGERANT.

Liquid refrigerant should be added to the system only via the charging valve sited adjacent to the liquid receiver, and the manifold should remain connected to the charging valve during the period after dehydration.

1.0 Charging Procedure

1.1 Remove the valve cap and outlet cap from the R12 cylinder and secure the adaptor and charging pipe, ensuring that the appropriate sealing washers are in place.

1.2 Support the inverted cylinder on scales or a suitable spring balance with the outlet above the level of the charging valve.

1.3. Connect the free end of the charging pipe to the manifold but do not tighten this connection or open the manifold valve.

1.4. Open the cylinder valve slightly to purge the air from the charging pipe at the loose connection. Allow gas to escape for a few seconds, then tighten the loose connection.

1.5. Note the weight of the cylinder then, with the temporary 220 volt supply to the liquid line solenoid valve energised, fully open the cylinder and manifold valves and weigh in the full charge of refrigerant.

1.6. Close off the refrigerant cylinder valve, close the unit charging valve and switch off the temporary A.C. supply.

1.7. If the system has accepted the full refrigerant charge disconnect the charging equipment from the charging valve and refit the sealing cap on the charging valve inlet connection.

1.8. Start the equipment and allow it to operate for 15-20 minutes to warm through, and stabilise. Check the liquid line sight glass.

If conditions are such that the full recommended charge has not been drawn into the system, or topping up of the system is necessary as indicated by "flashing" in the liquid line sight glass with a correct discharge pressure of 10 kg/cm^2, the procedure detailed below under paragraph 2.0 should be followed.

When running the equipment, if the discharge pressure is below this figure progressively close off the condenser coil face to restrict the air flow until the correct discharge pressure is achieved, when a clear liquid line sight glass should be observed.

2.0 Adding Refrigerant to a Partially Charged System

Should it be necessary to add refrigerant to a partially filled system this should be carried out by drawing in the topping-up charge in liquid form via the charging valve.

2.1. Procedure

Invert the R12 cylinder to allow liquid transfer of refrigerant into the system and suspend the cylinder on a spring balance.

2.2. Connect the R12 cylinder to the system charging valve using the correct charging hose, purging the hose of all residual air. Open the charging valve but do not open the cylinder valve at this time.

2.3. Start the equipment by the normal method or operate and hold the "cooling test" pushbutton.

2.4. Observing the low pressure gauge progressively close the liquid receiver outlet valve until the suction pressure gauge indicates 1 kg/cm^2.

2.5. Open the cylinder valve and allow refrigerant to enter the system in increments of 0.5 kg. After each 0.5 kg has been added close off the cylinder valve, fully open the liquid receiver outlet valve and allow the system to run for 10 minutes checking the liquid line sight glass for evidence of flashing (with correct discharge pressure). Depending on refrigerant deficiency several additions may be required to fully charge the system, but the procedure must be carried out in 0.5 kg increments to avoid overcharging.

2.6. *When the system is fully charged close the charging valve. Close the liquid receiver outlet valve to effect pump down under control of the low pressure cut-out (or release the cooling test pushbutton if operating the equipment below normal operating temperature conditions).*

2.7. *After the equipment has stopped disconnect the R12 cylinder and cap off the charging valve. Fully open the liquid receiver outlet stop valve.*

2.8. *When a system has been opened for repair necessitating a pressure test it is recommended that the unit be run in the air conditioning mode for a period of 5 hours on test before returning to service. At the end of the test period, switch off the power supply and immediately carry out a thorough visual inspection and leak detection test, paying particular attention to any joints and valves disturbed during the repair or component replacement. This should be done prior to initiating the final pump down cycle before returning the unit to service.*

SECTION 12

REFRIGERATION SYSTEM FAULT FINDING

REFRIGERATION SYSTEM FAULT FINDING

INTRODUCTION

Observation of the refrigerant pressure gauges in the cooling system can often assist in the diagnosis of a fault condition. The high pressure gauge gives a visual indication of the condenser pressure from the delivery side of the compressor, and the low pressure gauge indicates the compressor suction pressure.

It should be noted that the refrigerant pressure indicated by the high pressure gauge will vary since it is dependent on both the temperature of the air passing over the condenser coil (the ambient air temperature) and the compressor suction or evaporator pressure.

The evaporator pressure indicated by the low pressure gauge will also vary since it is dependent on the temperature of the air passing over the evaporator coil. Under design conditions, i.e. with full passenger loading and a prevailing ambient temperature of 28°C, the high pressure gauge reading should be approximately 10 kg/cm^2 (44.5°C) and the low pressure gauge reading approximately 2.1 kg/cm^2 (0°C).

If the passenger load or ambient temperature is below the design condition then lower pressures will be indicated, and conversely if the load or ambient temperature is above the design condition then higher gauge readings will result. Thus when the equipment first starts and the coach interior temperature requires cooling, higher pressures will be indicated, but these will gradually fall as the interior temperature is reduced.

FAULT FINDING CHART

FAULT	CAUSE	REMEDY
A. High condenser pressure	(1) Condenser tube surfaces and fins clogged with dirt, causing air flow restriction and reduced heat transfer.	Clean dirt from tubes and fins.
	(2) Compressor discharge stop - valve or liquid receiver inlet valve closed or only partially open.	Open valve(s) fully.
	(3) Overcharge of refrigerant in the system.	Purge excess refrigerant.
	(4) Condenser fan motor defective.	Renew motor unit
	(5) Condenser fan motor stopped due to operation of overload	Reset overload relay. Investigate for further fault.
B. Low condenser pressure	(1) Loss or undercharge of refrigerant in the system.	Replenish to the recommended level. See Section 11.
	(2) Choked refrigerant filter (diagnosed by the filter end of the filter outlet pipe being chilled).	Pump down refrigerant as described in Section 3. Renew filter element as described in Section 5.
	(3) Restriction in the liquid refrigerant pipe circuit (diagnosed by the part immediately after the restriction being chilled).	Drain or pump down refrigerant as described in Section 3. Remove restriction. Recharge system with refrigerant if necessary.
	(4) Liquid receiver outlet valve partially closed.	Open valve fully.
	(5) Suction stop valve partially closed.	Open valve fully.
	(6) Defective liquid line solenoid valve.	See Section 3 and check valve operation.

FAULT	CAUSE	REMEDY
B. Low condenser pressure (cont'd)	(7) Defective or mal-operating expansion valve	Refer to Section 6.
	(8) Compressor internal valves malfunctioning.	Apply test procedure detailed in Section 4.
C. High suction pressure	(1) Excessive liquid flow through expansion valve.	Check that thermal phials are secure on suction pipes. If necessary renew internal components. See Section 6.
	(2) Compressor valves not operating efficiently.	Apply test procedure detailed in Section 4.
	(3) Compressor capacity control system not operating correctly. Compressor running with cylinders continuously unloaded.	Check unloading pressure switch and action of unloading solenoid. See Section 4.
D. Low suction pressure	(1) Restriction in the suction pipe or liquid refrigerant pipe system (diagnosed by the part immediately after the restriction being chilled).	Check for a choked pipe, valve or filter. Drain system, replace and refill system.
	(2) Expansion valve closed or only partially open.	Check for faulty valve. Dismantle and clean if necessary.
	(3) Suction stop valve on compressor closed or only partially open.	Open valve fully.
	(4) Air circulation fan motor defective.	Check motor supply circuit and if necessary renew motor unit.
	(5) Air filters choked with dirt.	Replace with clean filters.
	(6) Liquid receiver outlet valve partially closed.	Open valve fully.

FAULT	CAUSE	REMEDY
D. Low suction pressure (cont'd)	(7) Evaporator coils choked with dirt.	Clean
	(8) Loss or undercharge of refrigerant in the system.	Replenish to the recommended level. See Section 11
	(9) Defective liquid line solenoid valve	See Section 3 and check valve operation. Renew if necessary.
	(10) Compressor capacity control system not operating correctly. Compressor running with cylinders continuously loaded.	Check unloading pressure switch and action of unloading solenoid. See Section 4.
E. Inefficient cooling of coach	(1) Temperature sensing thermostats malfunctioning.	Renew faulty thermostat with a serviceable 'spare'.
	(2) System undercharged with refrigerant	Replenish to the recommended level. See Section 11.
	(3) Restriction in some part of the system (diagnosed by the part immediately after the restriction being chilled).	Pump down or drain refrigerant as described in Section 3. Clear restriction. Recharge system with refrigerant as described in Section 11.
	(4) Liquid receiver outlet stop valve closed or only partially open.	Open valve fully.
	(5) Compressor suction stop valve closed or only partially open.	Open valve fully.
	(6) Expansion valve choked or not opening correctly.	Check and clear restriction. See Section 6.
	(7) Evaporator fins choked with dirt.	Clean.
	(8) Air filters choked with dirt.	Replace with clean filters.

FAULT	CAUSE	REMEDY
F. Excessive cooling of coach	(1) Temperature sensing thermostats malfunctioning.	Renew faulty thermostat with a serviceable 'spare'.
	(2) Compressor motor failing to stop.	Check temperature control system and compressor motor contactor coil circuit.
G. Compressor fails to run	(1) No power	Check circuit breakers and overloads; trace back until fault is located. Compressor shut down on excess temperature.
	(2) Piston seized	Remove motor compressor head. Inspect for damaged valve/seized parts. See Section 4.
	(3) Seized bearings in compressor or motor	Replace compressor
	(4) Compressor motor burned out	Replace compressor
H. Compressor unit excessively noisy	(1) Oil level low.	Replenish to the correct level. See Section 4
	(2) Oil level excessively high. (indicated by a 'hydraulic knock').	Drain to the correct level.
	(3) Refrigerant flooding back.	Check expansion valve for leak.
J. Compressor loses oil	(1) Refrigerant level low.	Replenish refrigerant (check for leak).
	(2) Choked expansion valve or strainer.	Clean or renew. See Section 6.

SECTION 13

MAINTENANCE OF ELECTRIC MOTORS

Illustrations

MAINTENANCE AND OVERHAUL OF G.E.C. MOTORS SIZE D90L D100L FITTED WITH GREASING FACILITY

The G.E.C. ALPAK motors are continuously rated A.C. induction motors designed for traction, and are illustrated in sectional form at the end of this text.

MAINTENANCE IN SERVICE

Although the motors require very little maintenance it is strongly recommended that the machines are included in a regular 3 monthly maintenance schedule.

Motors should be kept as clean as possible, particularly as cooling is effected by airstream flow over motor casing. With the motor supply isolated a periodic check on the security of the electrical connections is recommended and ensure that the holding down bolts are secure. When the terminal box cover is replaced check that the terminal box lid gasket is good for a further period of service and that a weatherproof seal is obtained. Ensure that the motor runs smoothly.

LUBRICATION

The motors are supplied with open type re-greasable bearings and should be lubricated very sparingly (only one or two strokes of the grease gun) at intervals of about 10000 running hours during service. Over-lubrication is detrimental and will shorten the bearing life.

OVERHAUL

Although the motor is of simple construction every care should be exercised when dismantling and on re-assembly. Damage can be inflicted to the windings, bearings, shaft and rotor if handled without care.

Dismantling

With the motor removed from the air conditioning equipment and placed on the workbench first clean the exterior surfaces.

Unscrew the drive endshield fixing screws and tap off the endshield using a wood drift. Care should be taken to avoid damage to the shaft seal when removing the endshield. Do not lose the pre-load spring inside the endshield.

Rotors are located by means of bearing retaining clamps (tab nuts) at the non-drive end. To remove the endshield from the frame it is only necessary to rotate the screws anti-clockwise by approximately one and a half turns to operate the release mechanism (see illustration), unscrew the endshield fixing screws, and the endshield can be tapped off from the frame spigot.

The rotor can now be withdrawn from the stator.

Remove bearings by using an extractor, applying pressure to the inner race only.

Should it be necessary to examine the bearings and inside of the motor, follow the above procedure, but withdraw rotor and drive endshield as one unit from the drive end of the stator.

Cleaning

Any dirt which has accumulated in the endshields, frame or stator windings should be cleaned out by blowing with dry compressed air, making sure that the terminal box is also free of any contaminate. If compressed air is not available, bristle brushes and cloths may be used. Do not use wire brushes or scrape with a knife on windings or leads, otherwise serious damage may result. To remove greasy deposits or oil use a cloth moistened with white spirit, B.R. Cat No 27/29300. This solvent is inflammable and the usual care with regard to naked flames must be observed.

Bearings and grease passages should be cleaned out with white spirit, ensuring complete cleanliness and freedom from dust or grit. Fresh grease should be pumped through the nipples until it exudes from the grease passages inside the endshields.

Examine the cleaned bearing races and balls, and if in satisfactory condition apply new grease. Cleaned bearings must be re-packed with the correct grade lubricant (Alvania RA), revolving the inner race as the grease is worked in. Grease cavities must not be packed completely full of lubricant as this causes churning and overheating, resulting in a reduction of bearing life. A segment within the cavity equal to approximately the bearing thickness should be left clear of grease. Before re-assembly check that all interior surfaces are clean and dry.

Re-assembly

Re-assembly is by reverse of dismantling procedure, taking care that the tab nuts on the endshield are in the off position when fitting the non-drive end endshield.

Motors fitted with shaft seals to give a degree of protection better than the standard IP44 (see motor rating plate) should be examined and any defective seals replaced. Additional sealant may also have been applied during motor manufacture, (e.g. at the endshield/frame joint face) to give the degree of protection specified. If any doubt exists as to where sealant should be applied to restore original protected condition, please consult the manufacturers nearest agent.

All fixing screws should be tightened evenly, making sure that no distortion of the endshield occurs.

Rotate the shaft. If locked or stiff, loosen the endshield screws, and re-tighten, spinning the shaft to ensure freedom. Never fully tighten screws individually, ensure that all fixing screws are evenly tightened.

Recommissioning after overhaul

Treat as a new machine.

Check that the rating plate is secured on the frame.

Ensure that the cabling and unions are correct and secure before switching on the motor to check rotation.

Switch off and install the motor in the equipment. Connect up supplies in accordance with the motor connection diagram, and interconnection diagrams in Section 15.

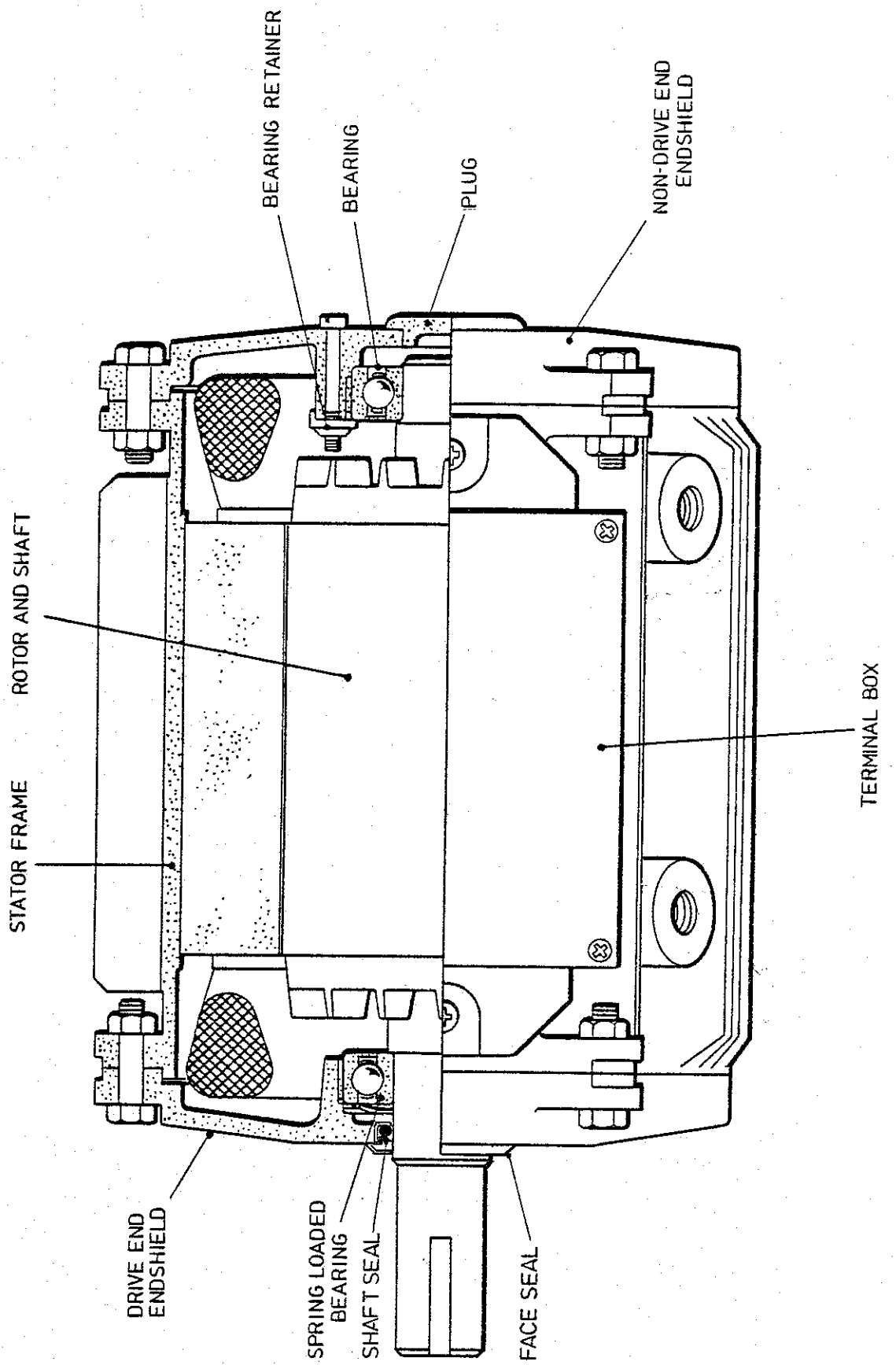

MOTOR TYPE 80 to 180 M (A.S.R.)
(SPEC IP54-55)

SECTION 13
FIGURE 1

8620

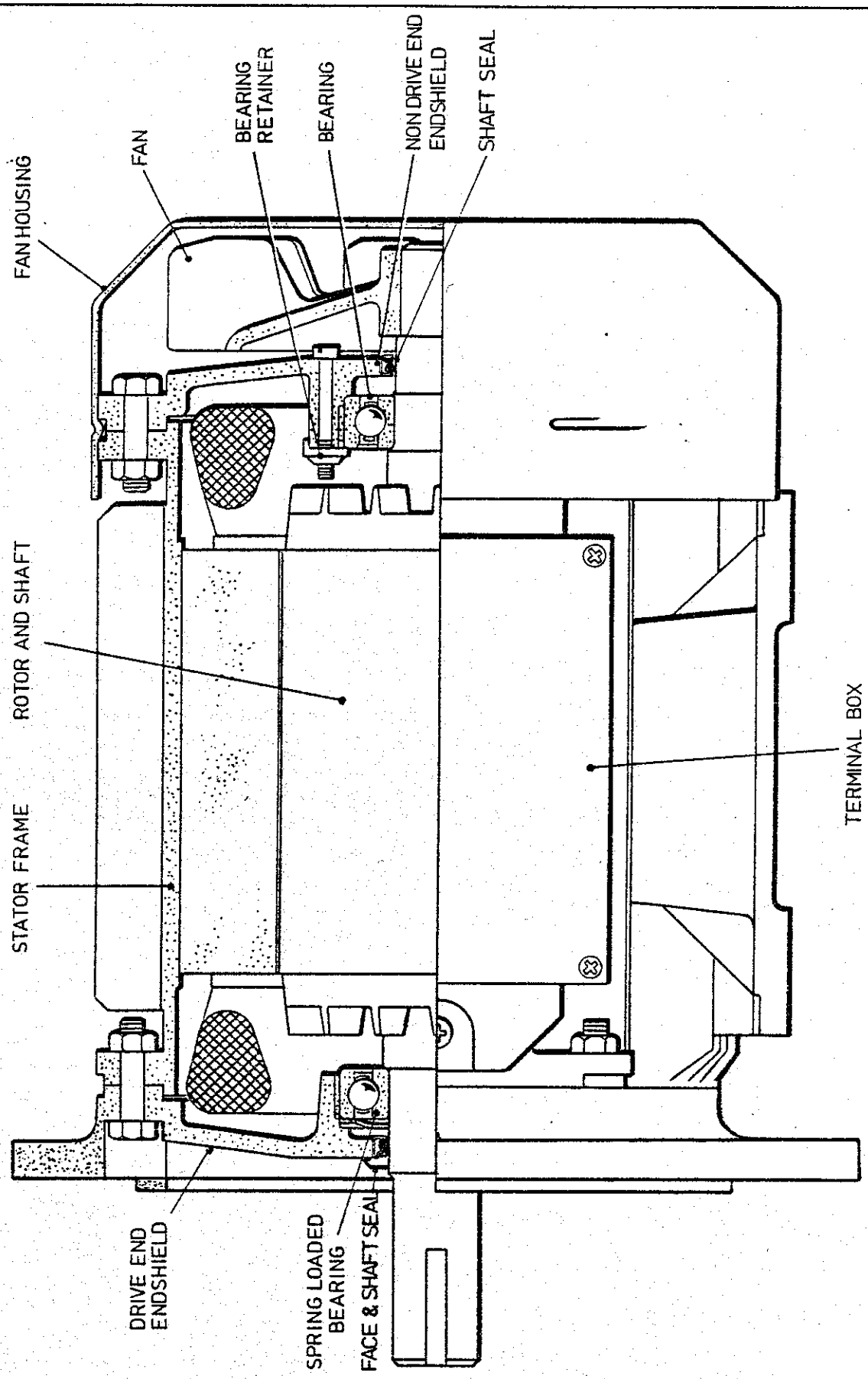

MOTOR TYPE 80 to 180 M(T.E.F.C)
(SPEC IP54-55)

SECTION 13
FIGURE 2

8619

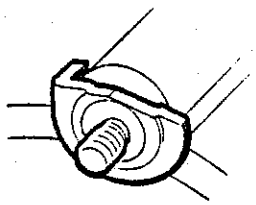

BEARING RETENTION DEVICE

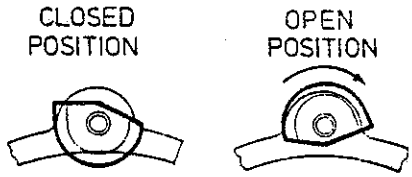

VIEW AT ARROW SHOWING RETENTION DEVICE IN CLOSED AND OPEN POSITIONS.

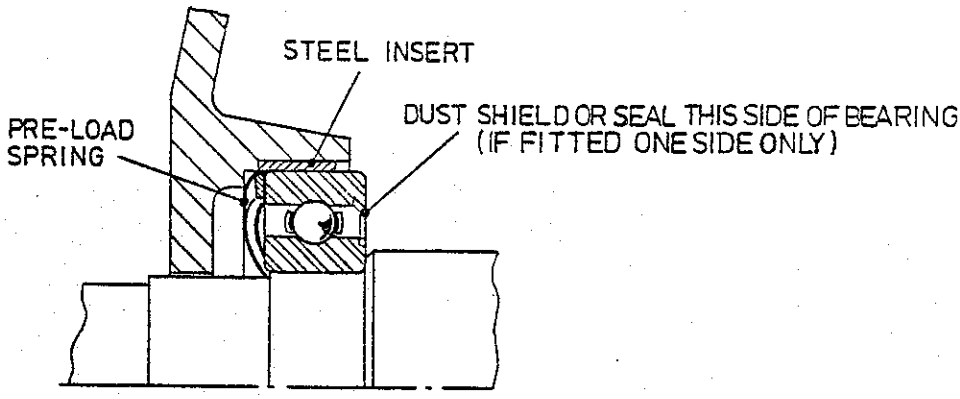

DRIVE END

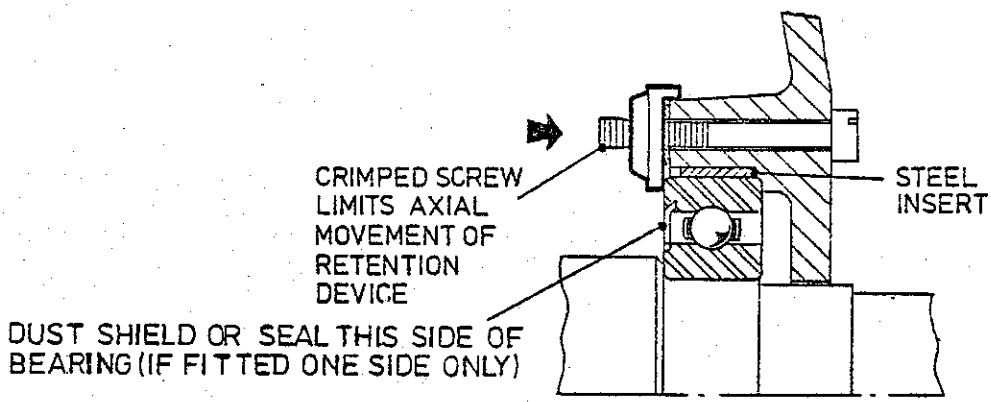

NON-DRIVE END

NOTE: BEARING RETENTION DEVICE NOT FITTED TO MACHINES OF FRAME SIZE 63 or 71.

8053 / 2	BEARING ARRANGEMENTS	SECTION 13
		FIGURE 3

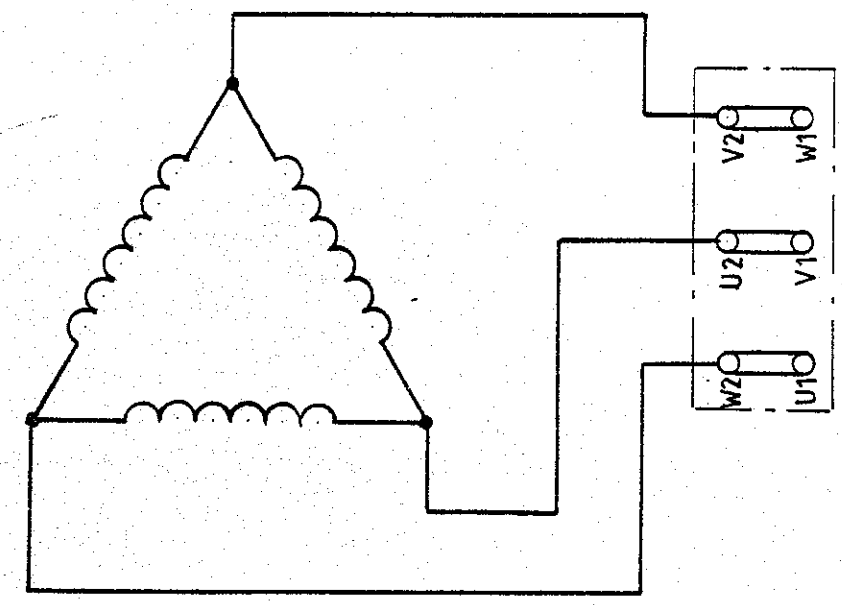

8546	CONNECTION DIAGRAM FOR STANDARD THREE PHASE A.C. FAN MOTOR	SECTION 13 FIGURE 4

SECTION 14

AIR FILTERS
- - -
AIR DAMPERS

Illustrations

AIR FILTERS

The two air filters fitted to the air conditioning unit each comprise a B.R. type general purpose disposable unit comprising three layers of pleated tissue media enclosed in a strong cardboard frame with a "punch cap" grid on the inlet side and stiffening bar on the outlet side.

The filters are accommodated in a filter guide frame and retained by knurled captive screws fitted with retaining clips. Filter units should be fitted with the punch cap grid facing outward and the stiffening bar towards the evaporator coil.

Access for inspection and replacement is provided in the form of a removable door in the sloping side panel of the unit, the door being fitted with locating tongues on the top edge and a single standard budget lock for security.

Low suction pressure in the refrigerant circuit or inefficient cooling of the passenger accommodation may be caused through choked air filters.

Check the filters at monthly intervals. If they appear to be severely obstructed install spare filters and dispose of the dirty units.

It is not possible to specify the duty period of these filters as this is dependent upon conditions in the territory where the coach is in service.

OUTSIDE AIR DAMPER AND HIGH/LOW LEVEL DAMPER

DESCRIPTION OF DAMPER MECHANISM

The damper mehanism has been designed for reliability and minimum maintenance. The damper vane bearings are of a spherical self-aligning type with P.T.F.E. liners and require no maintenance.

Two compression springs are used in the linkage to the solenoid and it is suggested that the illustration - Figure 1 is studied prior to adjustment so that the operating mechanism is clearly understood. The linkage basically consists of a plunger working in a tube against a return spring. The damper vane itself is operated by a lever which is keyed and bolted onto the damper shaft. The other end of the lever is slotted and pivots on the plunger via a 'nylatron' pin. The slot in the lever allows linear travel of the plunger whilst the lever itself moves through an arc as the damper vane rotates to the closed position. The plunger is in turn actuated by a rod which is connected to a tapped block at the solenoid plunger. A smaller compression spring is interposed between the connecting rod and plunger to provide overtravel for the solenoid and to ensure that sufficient force is created to provide adequate sealing of the damper vane in the closed position.

DAMPER ADJUSTMENT

The damper assembly should first be checked to ensure that there is no serious misalignment. The plunger should move freely within the tube without binding. Check also that the cotter pins at the pivot points do not foul anything.

The nylatron pin at the lever pivot point should be free to rotate without binding.

If the above points are in order the damper linkage should now be adjusted to give the correct amount of overtravel. This is achieved by slackening the locking nut at the solenoid end of the connecting rod and shortening or lengthening the rod to give an overtravel of between 1.5 and 2 mm. It will be found that the overtravel is

easily measured by operating the solenoid plunger by hand until the door just bites into the seal and then measuring the gap between the solenoid faces. When the adjustment is complete tighten the lock-nut and operate the solenoid a few times and check for silent operation. Excessive electrical noise indicates too much overtravel or in extreme cases binding of the linkage.

If it is wished to check the spring tension a spring balance can be used. With the correct overtravel the force with the solenoid completely closed should be between 5.5 kg and 6.5 kg.

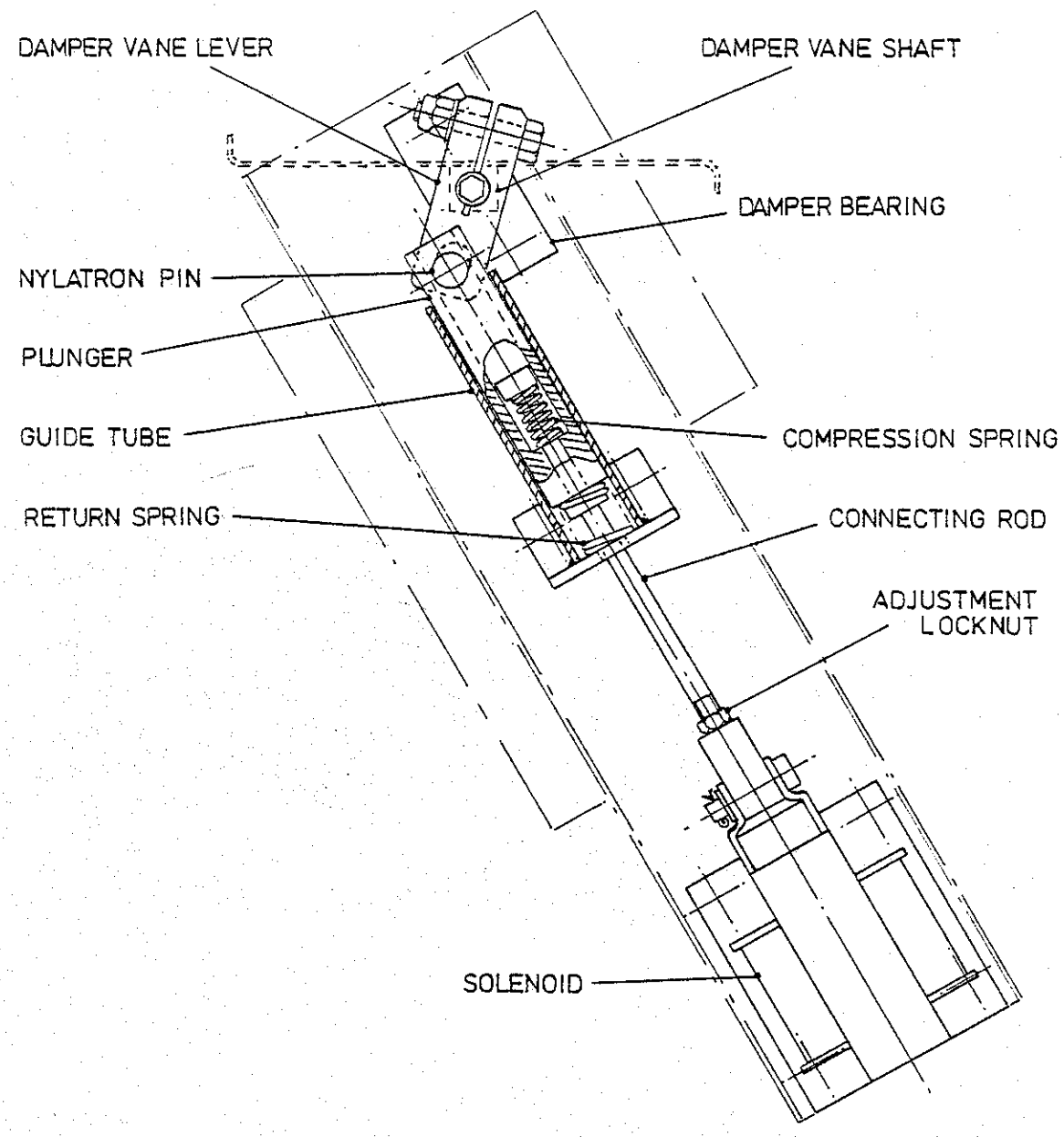

NOTE: THIS ASSEMBLY IS TYPICAL FOR BOTH OUTSIDE AIR & HIGH/LOW LEVEL DAMPERS

8626	SOLENOID OPERATED DAMPER	SECTION 14
		FIGURE 1

SECTION 15

ELECTRICAL CONTROL EQUIPMENT

Illustrations

ELECTRICAL CONTROL EQUIPMENT

NOTE:- Circuit references included in the text may be identified on the schematic diagram CD 333481 included at the end of this section.

CONTROL AND PROTECTION EQUIPMENT SETTINGS

Circuit Breakers MCB1-4 switched to ON.
Overload relays OL1-3 in reset condition
High Pressure Cut-out Switch HP in reset condition.

GENERAL

Power supply for operation of the air conditioning equipment is derived from two trainline supplies, each of which is powered by an engine alternator set in the power car. Both engine sets are required to be operational to provide power sufficient to drive the full heating system although the air conditioning and partial heating can be operated with only one engine set running.

The D.C. supplies feeding the control relays R1 and R2 are cross-connected between each coach to ensure an equal load on each generator under normal operating conditions. In the event of one engine set failure or an excessive number of coaches being coupled together, then the control circuits are disconnected to isolate the 10 kW heating bank in each unit to further reduce the overall load. Whichever engine set is started first will take up the air conditioning/17 kW heating load, the other engine set will supply the remaining 7 kW of heating.

CIRCUIT DESCRIPTION

With the A.C. and D.C. power connected and assuming that the 'A' supply is available first, the D.C. control relay R1 will be energised before relay R2. Contact R1/1 closes to energise the supply contactor SC1 which is mechanically and electrically interlocked to prevent operation of supply contactor SC2. Contact R1/2 closes in the 10 kW heater contactor coil circuit but has no function at this stage.

The D.C. control relay R2 will be energised when the 'B' supply is available, with contact R2/1 closing to prepare the supply contactor SC2 coil circuit in the event of the 'A' supply power failure. Contact R2/2 closes to prepare the 10 kW heater contactor coil circuit.

With contactor SC1 energised contact SC1/1 closes to prepare the heating and cooling control circuits and energises the start time delay relay SDR; contacts SC1/2 and SC2/3 open to isolate the SC2 coil circuit and the main poles close to prepare the supply to main heating and motor circuits. After a nominal 5 second delay contact SDR1 and 2 changeover to energise the fan contactor C1 to initiate ventilation. The ventilation fan motor VEF will continue to operate until such time as the power supply is interrupted.

When the ventilation fan motor is operating, the series relay FSR will be energised and contact FSR/1 closes to put the heating and cooling control circuits under thermostatic control. Contact FSR/2 closes to prepare the indicator lamps and fresh air damper solenoid circuit. Indicator lamp IL1 (remote from the unit) will light to indicate that the ventilating fan is operating and heating or cooling is available.

Temperature Control

Coach temperature is monitored by a four element thermostat T1 mounted in the return air stream, and this thermostat controls the operation of both heating and cooling equipment. The external ambient temperature is also monitored by a two element thermostat AT1

mounted adjacent to the fresh air inlet in the underframe unit. The ambient thermostat provides an override feature to increase heating capacity in abnormally cold ambient conditions as described below.

Heating

With a coach temperature of 17°C or below, the thermostat contacts T1/1, T1/2, T1/3 and T1/4 are in the alternative position to that shown on the circuit diagram. The fresh air damper relay FADR is energised, contact FADR/2 closing to energise the damper solenoid FADS which closes the fresh air damper. Internal air is now recirculated without the addition of fresh air (See note below). Heater contactors HC1, HC2 and HC3 are energised and full heating is provided, the warm air being discharged from both roof level and floor level ducts.

As the interior temperature rises to 18°C coach thermostat contact T1/4 opens to release the fresh air damper relay FADR. Contact FADR/1 opens to isolate the heater contactor HC3 disconnecting the 10 kW heater no. 3 and contact FADR/2 opens to release the damper solenoid FADS causing the fresh air damper to move to the open position. If the outside air temperature is below 8°C the heater contactor will remain energised via the contact of the ambient temperature thermostat AT1/1.

As the interior temperature continues to rise, at 20°C the thermostat contact T1/3 opens to release the second stage heating contactor HC2 disconnecting the no. 2 heater bank. However if the external ambient temperature is still below 2°C this contactor will remain energised via the ambient temperature thermostat contact AT1/2 and full heating will remain on.

With a further increase in coach temperature to 21°C the thermostat contact T1/2 will change over to release the remaining heater contactor HC1 and all heating circuits will be de-energised. The operation of this thermostat contact will energise the low level damper solenoid LLDS to close the low level damper. This causes

the air flow to be circulated via the roof duct only.

Note 1: The fresh air damper solenoid FADS is also energised via the external control connection CD when the train brakes are applied. This closes off the fresh air intake to avoid ingress of brake dust. The damper is reverted to the normal open condition when the brakes are released.

Note 2: In the event of excessive heating load or failure of one engine set supply, facility is provided to isolate the 10 kW heater by supply interruption to the heater contactor HC3 in the external line between pins CC and CG of control circuit plug and socket.

Cooling

As the interior temperature rises through 22°C the coach thermostat contact T1/1 closes to initiate air conditioning by energising the cooling relay CR. Contact CR/1 closes to energise the compressor/condenser fan motor contactor C2, contact CR/2 closes to energise the refrigerant liquid line solenoid valve LLSV allowing refrigerant flow, and contact CR/3 closes to put the compressor unloading solenoid USV under control of the pressure switch LP2. When contactor C2 energises to start the compressor and condenser fan motors C and CF auxiliary contacts C2/1 and C2/2 close. Contact C2/2 prepares the cooling test lamp circuit (TL2) and contact C2/1 provides a contactor holding circuit to maintain the motor circuit at the end of a cooling cycle.

As cooling reduces the coach temperature through 21°C thermostat contact T1/1 opens to release the cooling relay CR. Contacts CR/2 opens to release the liquid line solenoid valve stopping the flow of refrigerant, contact CR/3 opens in the unloading solenoid circuit and contact CR/1 opens. The compressor and condenser fan motors continue to operate until falling refrigerant pressure causes the pressure switch contact HP/LP1 to open releasing the motor

contactor C2 to shut down the motors. The low pressure element of the cut-out (LP1) automatically resets as the suction pressure rises due to evaporation of refrigerant from the oil in the compressor crankcase.

EQUIPMENT TEST FACILITIES

In order to check equipment operation with the heating and cooling test pushbuttons supplies should be connected as for normal operation and the remote indicator lamp IL1 should be illuminated. The ventilating fan will be in operation.

Heating Test

Operation of push button TB1 will override the prevailing operating mode of the air conditioning equipment by bypassing the thermostatic control.

Contacts TB1/1, TB1/2 and TB1/3 will close to energise the heating contactors HCL, HC2 and HC3 and the damper relay FADR. The fresh air damper will close due to energisation of the solenoid FADS. Contact TB1/4 will close, and provided that all heating contactors are energised the test lamp TL1 will be illuminated.

If the 10 kW heater contactor HC3 is isolated at the control line connections CC-CG then contact HC3/1 will remain open and the indicator lamp will be extinguished.

Push button contact TB1/5 opens to isolate the **compressor contactor** circuit, **preventing cooling operation.** If the cooling equipment was operational at the time when the heating test button was pressed then the compressor would stop **without following the normal pump down** sequence, but warm air will discharge only from the roof duct as the thermostat contact T1/2 will be closed to energise the low level damper solenoid.

When the heating test button is released the equipment will revert to its previous operating condition under control of the coach thermostat.

Cooling Test

Operation of the cooling test pushbutton TB2 will again override thermostatic control and initiate a cooling cycle. Contact TB2/1 closing completes the cooling relay CR control circuit and the sequence of operation will be as described under "Cooling". Contact TB2/2 closes to energise the low level damper solenoid, TB2/3 opens to isolate the heater control circuits, and TB2/4 closes to illuminate the cooling test indicator lamp.

When the cooling test button is released the equipment will revert to thermostatic control. Although the cooling relay will release immediately the cooling equipment will continue to operate to pump down the refrigerant into the liquid receiver before the compressor and condenser fan motors shut down under control of the low pressure cut-out switch LP1.

EQUIPMENT PROTECTION

High/Low Pressure Cut-out Switch (HP/LP1)

This unit is described in Section 2. The cut-out switch is incorporated in the refrigerant circuit and will operate to shut down the cooling equipment if the refrigerant pressure exceeds or falls below the pre-determined conditions. When the cut-out trips contact HP/LP1 opens to release the compressor/condenser fan motor contactor C2 and isolates the motor supply. See Section 12 for possible causes of cut-out operation.

The low pressure element is self-resetting but the high pressure element is of the manual reset type requiring fault investigation prior to resetting. For details of pressure settings refer to the Equipment Data Sheets in Section 16.

Compressor Thermostat (CK)

This compressor mounted Klixon type thermostat senses the motor winding temperature. In the event of excess temperature contact CK opens to release the **compressor contactor C2 and the compressor will stop without following the pump down sequence.**

The thermostat is self-resetting and the cooling cycle will re-commence after the motor has cooled to within normal safe operating temperatures.

Fan Series Relay (FSR)

The operating coil of this relay is connected in series with the supply to the ventilation fan motor (VEF) and protects the equipment in the event of fan motor failure during a heating demand. If the motor fails to draw the normal current relay contact FSR/1 opens to isolate the supply to the heating and cooling control circuits. Contact FSR/2 opening will extinguish the remote indicator lamp IL1.

Motor Overload Protection(OL1,OL2,OL3)

Each motor supply circuit is provided with a thermal overload device to protect the equipment in the event of a sustained motor overload or single phasing.

In the case of the ventilation fan motor the overload contact OL1 opens to release the motor contactor C1. With the opening of the main poles of the C1 contactor the series relay FSR will release to shut down the heating and cooling control circuits.

The trip contact on each of the compressor and condenser fan motor overloads (OL2, OL3) is in series with the motor contactor coil circuit, thus disrupting the motor supply in the event of overload.

All overloads are set to the manual reset condition and the cause of overload must be established before resetting the overload and re-starting the equipment.

Excess Temperature Thermostat (OHS)

The safety thermostat OHS is incorporated in close proximity to the heater banks to protect the equipment against excess temperature in the event of reduced air flow caused by external obstruction. When activated the Klixon type thermostat OHS opens to release the heater contactors, thus isolating the heaters. The ventilating fan will continue to operate to disperse the excess heat. The thermostat is self-resetting and will reconnect for normal coach thermostat control when normal operating temperature is attained.

MAINTENANCE OF CONTROL SWITCHGEAR

CAUTION: ISOLATE ELECTRICAL SUPPLIES BEFORE ATTEMPTING MAINTENANCE OF ANY ELECTRICAL EQUIPMENT

OTTERMILL-CHILTON CIRCUIT BREAKERS (MCB1-4)

Designed for the protection of low voltage distribution systems these circuit breakers are of sealed construction requiring no routine maintenance except for checking the security of electrical connections. In the event of sustained overload bimetalic thermal elements initiate action with an inverse time/current characteristic. Short circuit protection is provided by rapid magnetic tripping. The breaker is trip-free and cannot be held closed on a fault condition. Resetting can be achieved immediately after fault clearance by moving the operating lever to the ON position.

PYE ELECTRO DEVICES RELAYS (R1,R2)

These relays are plug-in style, fitted with a transparent dust cover and are retained by a stainless steel spring clip.

Internal component parts are not available separately and in the event of coil failure or contact burning the complete relay should be replaced.

For maintenance details of M.T.E. contactors and overload relays and Square D pneumatic timing relays see appended leaflets.

ELECTRICAL FAULT FINDING CHART

FAULT	POSSIBLE CAUSE	ACTION	REMARKS
1. No cooling, Ventilation only. Pilot Light illuminated.	(a) Condenser Fan Overload (OL3) tripped	Ascertain cause and reset	Refer to Equipment Data Sheets for Settings.
NOTE: In order to test the switchgear, energise the control circuit by operating the Test Button - Cooling TB2. The Test Light - Cooling TL2 should illuminate	(b) Compressor Overload OL2 tripped	Ascertain cause and reset	
	(c) High/Low Pressure Switch HP/LP1 tripped.	Ascertain cause - Reset HP element manually - LP element resets automatically	Refer to Sections 3 and 12.
	(d) Liquid Line Solenoid Valve LLSV inoperative	Check voltage across LLSV coil. If voltage OK, check coil for continuity, check valve mechanically. If no voltage present, check if CR/2 and CR/1 are closed.	Refer to (g). If CR/1 not closed, contactor C2 will not be energised
	(e) Compressor/Condenser Fan Contactor C2 inoperative	Check voltage across C2 coil. If voltage O.K., check coil for continuity. If no voltage present check if CR1 is closed.	Refer to 1(a),1(b) and 1(d). If CR/1 not closed contactor C2 will not be energised.
	(f) Cooling relay CR inoperative	Check voltage across CR coil. If voltage OK, check coil for continuity, check relay mechanically.	

FAULT	POSSIBLE CAUSE	ACTION	REMARKS
1. No cooling, Ventilation only. Pilot Light illuminated (cont'd)	(g) Coach Thermostat contacts T1/1 not closing	At an ambient temperature of 22°C and above, check that the Cooling Relay CR is energised	Check thermostat plug and socket connector
2. No cooling or Heating. Ventilation only. Pilot Light IL1 extinguished.	(a) Fan Series Relay FSR faulty	Check motor current and check relay action	Refer to Equipment Data Sheets
3. No Cooling, Heating or Ventilation. Pilot Light IL1 extinguished	(a) D.C. Control relays R1 and R2 inoperative	Check supply source and interconnections	
	(b) Start delay relay SDR inoperative	Check supply to relay and relay action	
	(c) Ventilation Fan Contactor C1 inoperative	Check voltage across C1 coil. If voltage OK, check coil for continuity, check relay mechanically. If no voltage present, check overload OL and series relay.	
	(d) Ventilation Fan Series Relay FSR inoperative	Check for open circuit in fan motor VEF or relay FSR	
	(e) A.C. supply failure	Check inter-car connectors Restore supply	

FAULT	POSSIBLE CAUSE	ACTION	REMARKS
4. No Heating, Ventilation only. Pilot Light illuminated	(a) Faulty Coach Thermostats T1/2,T1/3,T1/4	At ambient temperature of 20°C, 19°C and 17°C and below, check that thermostat contacts close.	Check that the connecting plug is fully mated
NOTE: In order to test the switchgear, energise the control circuit by operating the Test Button - Heating TB1. The Test Light-Heating TL1 should illuminate	(b) Faulty Cooling Test Button Contacts TB2/3	Isolate supply and short out contact TB2/3. Reconnect supply and test heating circuit.	
5. Excessive Cooling	(a) Compressor and Condenser Motors failing to stop	Check low pressure element of High/Low Pressure Switch HP/LP1	Refer to Section 3.
	(b) Faulty Coach Thermostat T1/1	Reset or replace	
6. Reduced Cooling	(a) Faulty refrigerant system	Check for shortage of refrigerant or obstruction in refrigerant circuit	Refer to Section 12.
	(b) Compressor Thermotector CK trips.	Ascertain cause. Contacts will re-set automatically	
7. Excessive Heating	(a) Faulty Coach Thermostat	Reset or replace	
	(b) Heater Contactor HC1, HC2 or HC3 failing to release.	Check contactors for mechanical stiffness, or welded contacts.	
8. Reduced Heating	(a) Faulty Coach Thermostats T1/2-T1/4	Reset or replace	

FAULT	POSSIBLE CAUSE	ACTION	REMARKS
8. Reduced Heating (cont'd)	(b) Faulty Heater Contactor HC1,HC2 or HC3	Check by operating Heating Test Button TB1.	Test lamp TL1 should light
	(c) Faulty Heater Elements H1,H2 or H3.	Check Heaters for continuity and insulation resistance.	Replace faulty elements.
	(d) Supply not available from both engine alternator sets	Check main circuit breakers MCB1 and MCB2.	Investigate cause if tripped
		Check control circuit breakers MCB3 and MCB4.	Investigate cause if tripped
		Check DC control relays R1 and R2	Check coil circuits
	(e) Fresh air damper solenoid relay FADR inoperative	Check voltage across FADR coil. If voltage OK, check coil for continuity, check relay mechanically	
	(f) Fresh Air Damper Solenoid FADS inoperative	Check voltage across FADS coil. If voltage OK, check coil for continuity, check valve mechanically. If no voltage present, check if (FADR/2) is made.	Refer to 8(g).

M.T.E. CONTACTORS
TYPE AX CO OR AX C1

GENERAL

These contactors, of modular construction, are triple pole units with one auxiliary contact of the same rating as the main poles. Up to four extra auxiliary contacts can be factory fitted.

Contact banks cannot be dismantled but are available as complete items for spares replacement in the event of damaged or worn components.

Two diagonally positioned screws secure the contact bank to the solenoid assembly, and removal of these is necessary in the event of coil replacement. Check that coil markings are correct for voltage before fitting to unit.

M.T.E. CONTACTORS
TYPE AXC3 OR AXC4

GENERAL

These contactors, of modular construction are triple pole units with facility for the addition of side mounted auxiliary contacts when required.

Contactors can be mechanically interlocked by inserting the interlock mechanism into slots on adjacent sides between two contactors and then mounting on a special baseplate. Interlocked contactors can also be mounted direct to the panel, providing the 20 mm dimension between the two contactors is maintained.

COIL AND CONTACT REPLACEMENT (See Fig 6)

To gain access to either contacts or operating coil, release the two screws (A) and remove the arc-shield (B).

Moving Contacts

1. Twist moving contact (C) and withdraw from the moulding.
2. Fit new contact in similar manner but ensure new contact is seated correctly below spring on AXC3 or beneath spring and retainer on AXC4.

Fixed Contacts

1. Release screw (D), lift out fixed contact (E), slide off terminal cage (F) and remove screw (D). Do not lose contact backing plate (G).
2. Fit screw (D) and backing plate (G) to new contact, slide on terminal cage (F), insert into moulding and secure screw (D). Replace arc-shield (B).

Operating Coil

1. Release the two screws securing the contact bank (H) to lower moulding.
2. Carefully separate the two mouldings noting that main throw-off spring is retained on armature.

3. *Withdraw coil terminal tags from moulding and remove coil.*

4. *Check coil markings are correct for voltage before fitting.*

   Fit new coil and re-assemble in reverse order. Replace arç-shield (B).

M.T.E. THERMAL OVERLOAD RELAY

GENERAL

The relay incorporates three bi-metal elements, any one of which when subjected to a sustained overload, operates a common trip bar to activate a normally open and a normally closed contact located on the right hand side of the relay.

The relay is equipped with a hand/auto reset selector situated adjacent to the reset button, and the selector should be set in the hand reset position necessitating fault rectification prior to actuating the reset button.

Three trip settings are indicated on the trip current regulator scale on the left hand side. The pointer should be set to the appropriate position as indicated in the Equipment Data Sheets.

No routine maintenance is necessary other than blowing out any accumulation of dust with compressed air.

Heater Element Replacement (See Fig. 7)

Remove the protective cover from the front of the unit to gain access to heater elements, cable clamps and screws. The heater elements may then then be removed from the front of the unit after first removing the securing screws and lockwashers.

Mount the replacement heater elements with the engraved plates at the top. Ensure that the elements are central within the bi-metal loops, then secure in position. When tightening the screws the elements should be held to prevent twisting. Replace the protective cover and secure with the two fixing screws.

SQUARE D PNEUMATIC TIMING RELAY TYPE AO-IE

NOTE: These instructions should be read in conjunction with fig 8 at the end of this Section.

PNEUMATIC TIMING UNIT - Repair of the timing unit, other than replacement of the snap switch, is not recommended as the accuracy and performance of the unit can be greatly affected when repairs are attempted in the field. Faulty timing units should be replaced from spares stock and the fault part returned for repair.

BASIC CONTACT MECHANISM - The Class 9007 Type B01 snap switch (4) serves as the contact mechanism and may be removed by disconnecting the wires and removing the two screws (7) holding it to the timing head.

When installing a new snap switch (4) the timing head must be adjusted as follows:-

Adjust the snap switch actuating screw (A) so that the snap switch (4) just trips at the downward limit of travel of the nylon diaphragm spool. Allow spring to push nylon diaphragm spool down: do not pull spool down.

As viewed from above, turn the actuating screw (A) counter-clockwise half turn or three flats of the hexagon head.

The nylon diaphragm spool should have approximately 1 mm overtravel after the snap switch trips; this can be checked by hand operation of the diaphragm spool.

MAGNET COIL - The magnet coil may be removed for replacement by first removing the two screw assemblies (9), the armature pivot (17) and the armature assembly (18). Next remove the spring clip (16), squeeze the ends of the yoke (13) and slide the coil off the magnet frame assembly (14) and yoke (13). To install a new magnet coil, reverse the above procedure.

CONVERTIBLE MAGNET FRAME - The magnet assembly used with this timing relay makes it possible to easily convert a time delay after energization (on delay) timer to a time delay after de-energization (off delay) timer or vice-versa. To make this change simply invert the magnet assembly and align as follows:

For time delay after energization (on delay) operation, position the magnet assembly with the armature (18) at the top. Then, with the armature in the sealed position and the head in the timed-out position, a 0.25 to 0.5 mm gap is required between the armature (18) and the nylon diaphragm spool.

For time delay after de-energization (off delay) operation position the magnet assembly with the armature (18) at the bottom. Then, with the armature in the sealed position, 0.13 to 0.38 mm play is required between the yoke (13) and the nylon diaphragm spool to ensure complete sealing of the magnet.

To obtain the positions specified above, the timing unit and the magnet assembly can be adjusted slightly within clearance which is provided in the mounting holes.

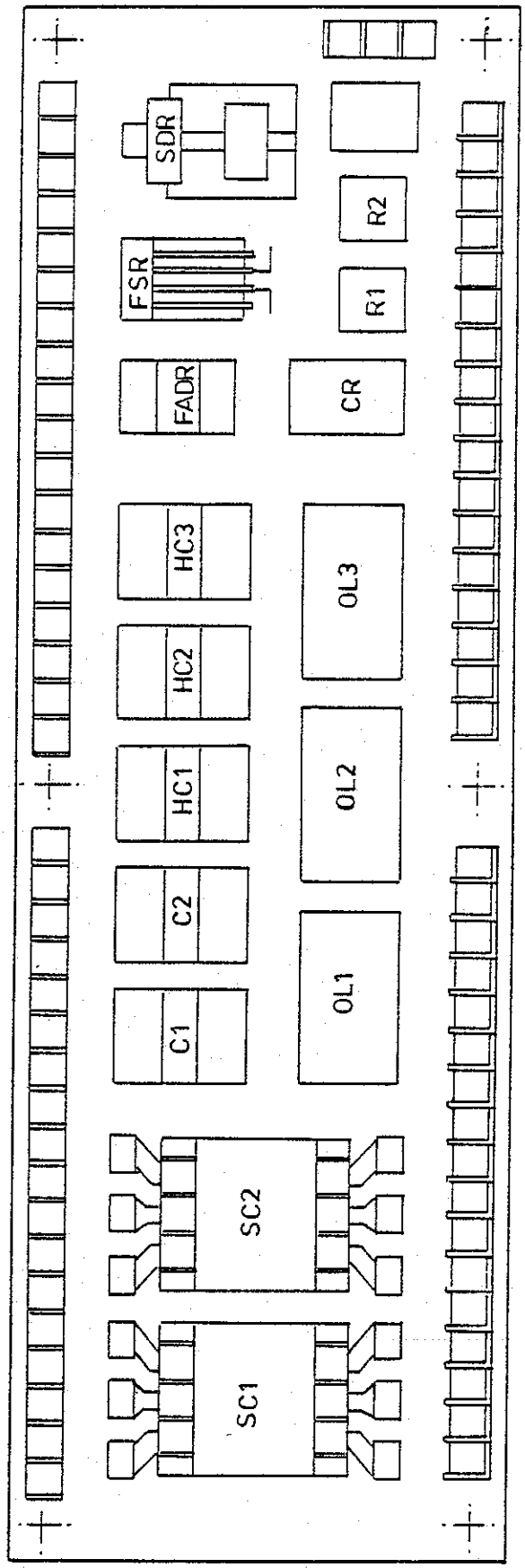

J 333341

COMPONENT LAYOUT - MAIN CONTROL PANEL

SECTION 15

FIGURE 3

8621

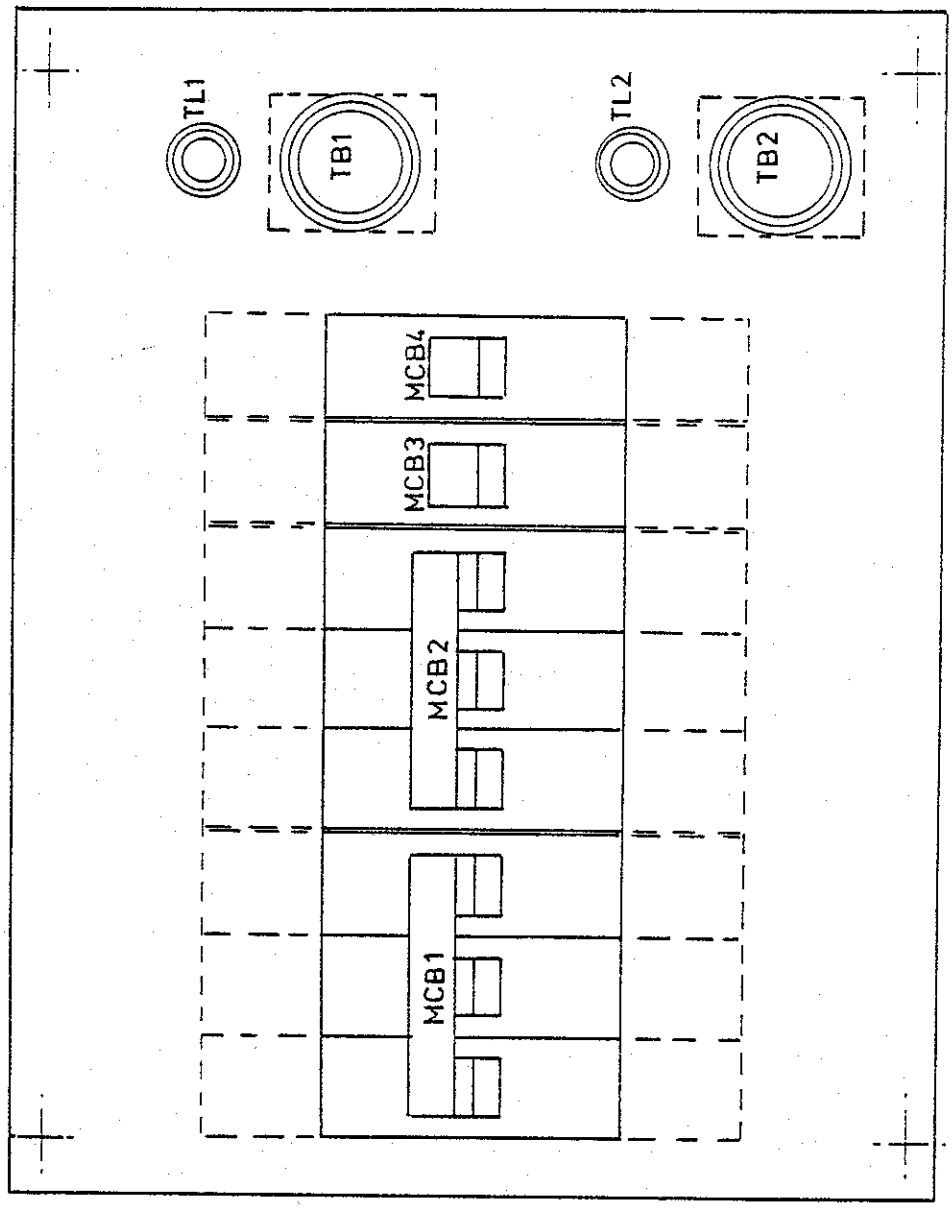

R333342

COMPONENT LAYOUT - CCT. BREAKER PANEL

SECTION 15

FIGURE 4

8622

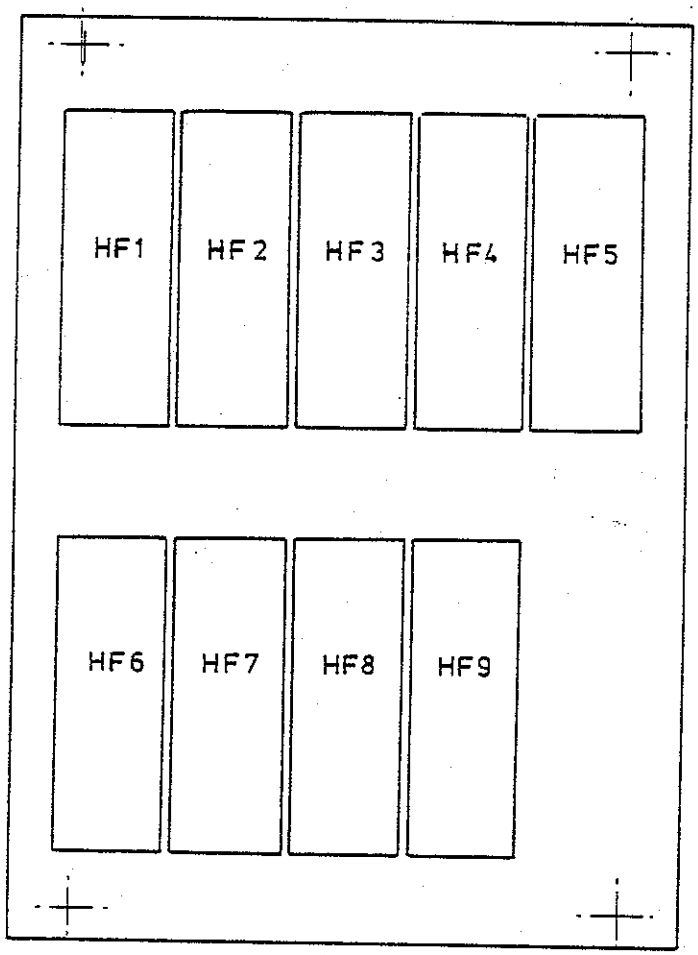

R 333403

COMPONENT LAYOUT - FUSE PANEL

SECTION 15

FIGURE 5

8623

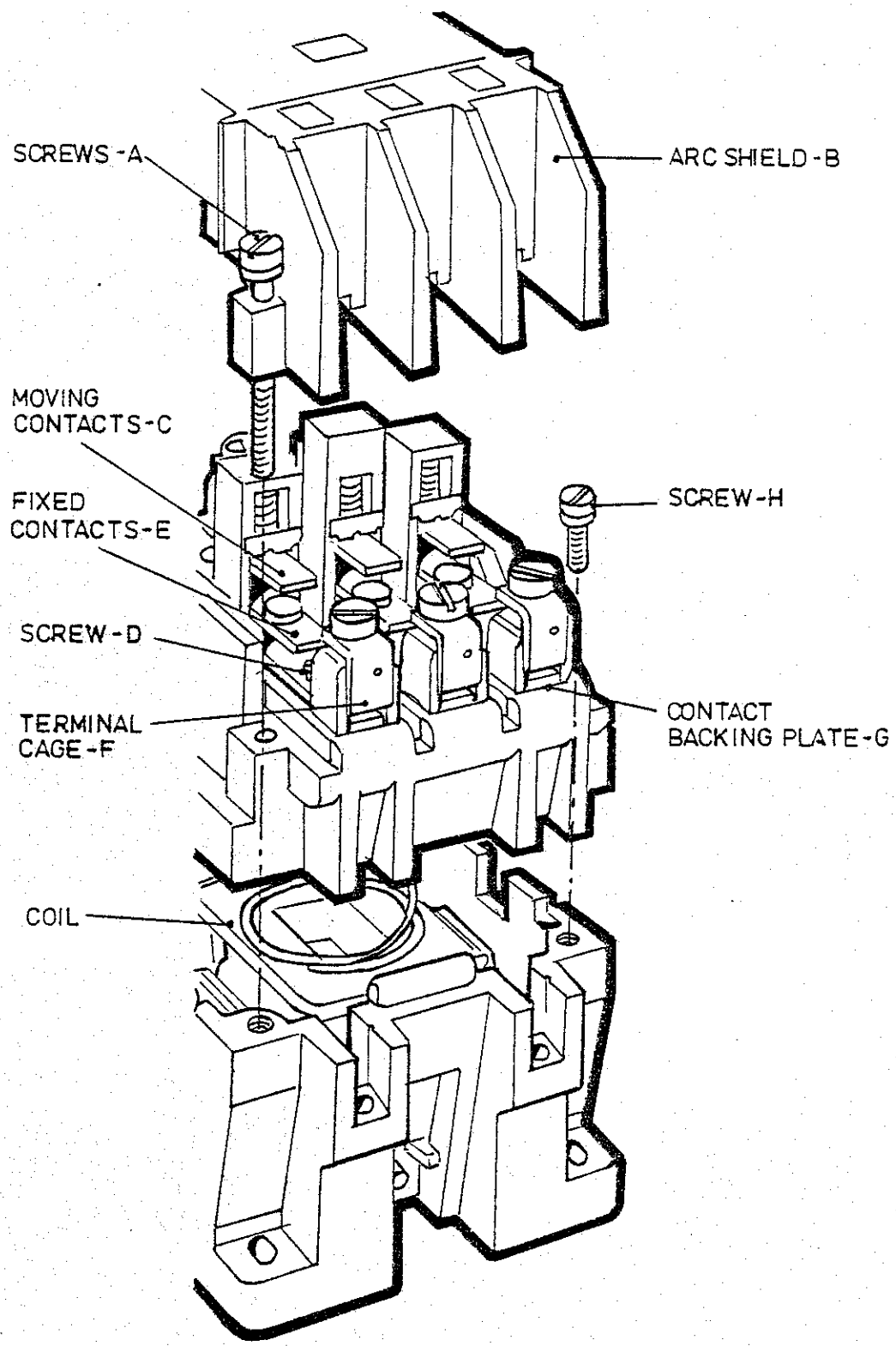

MTE CONTACTOR TYPE AXC3 & AXC4	SECTION 15
	FIGURE 6

8624

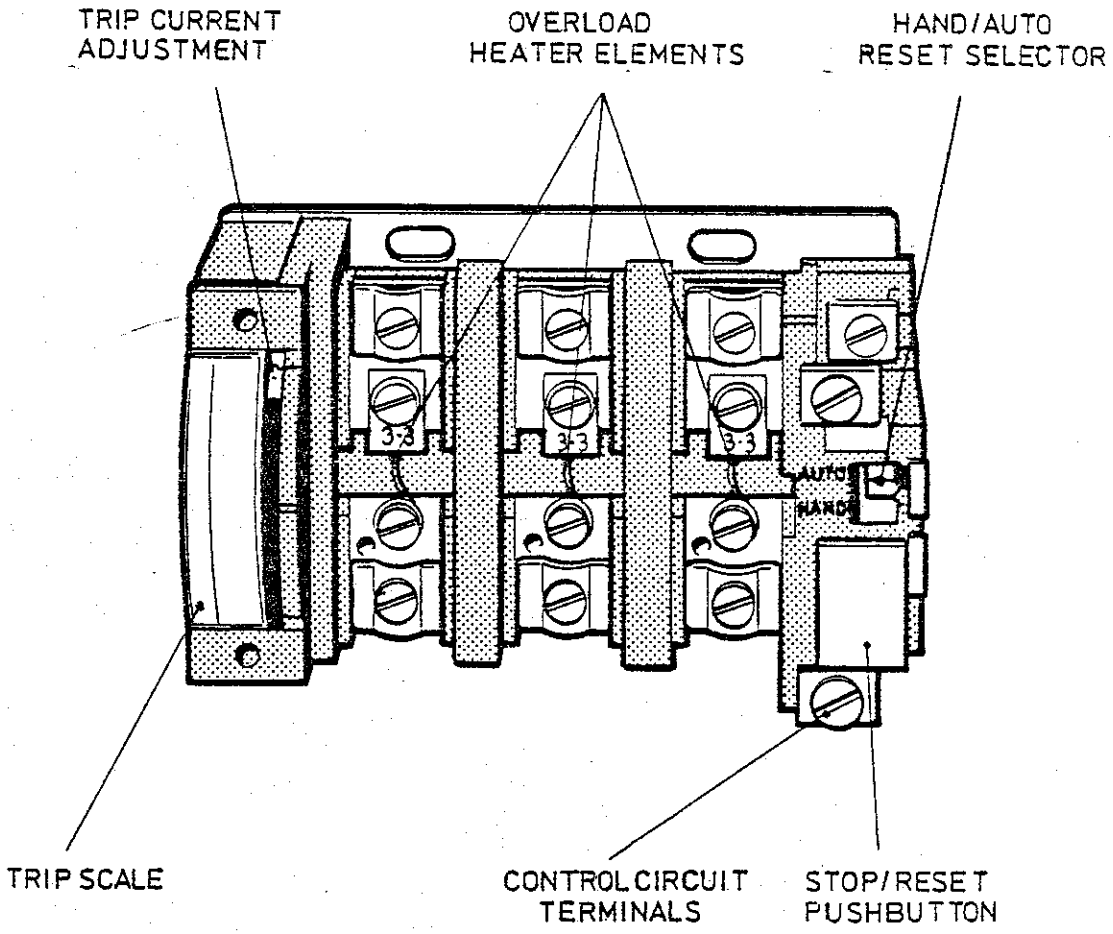

8110	THERMAL OVERLOAD RELAY TYPE UOL1/3	SECTION 15 FIGURE 7

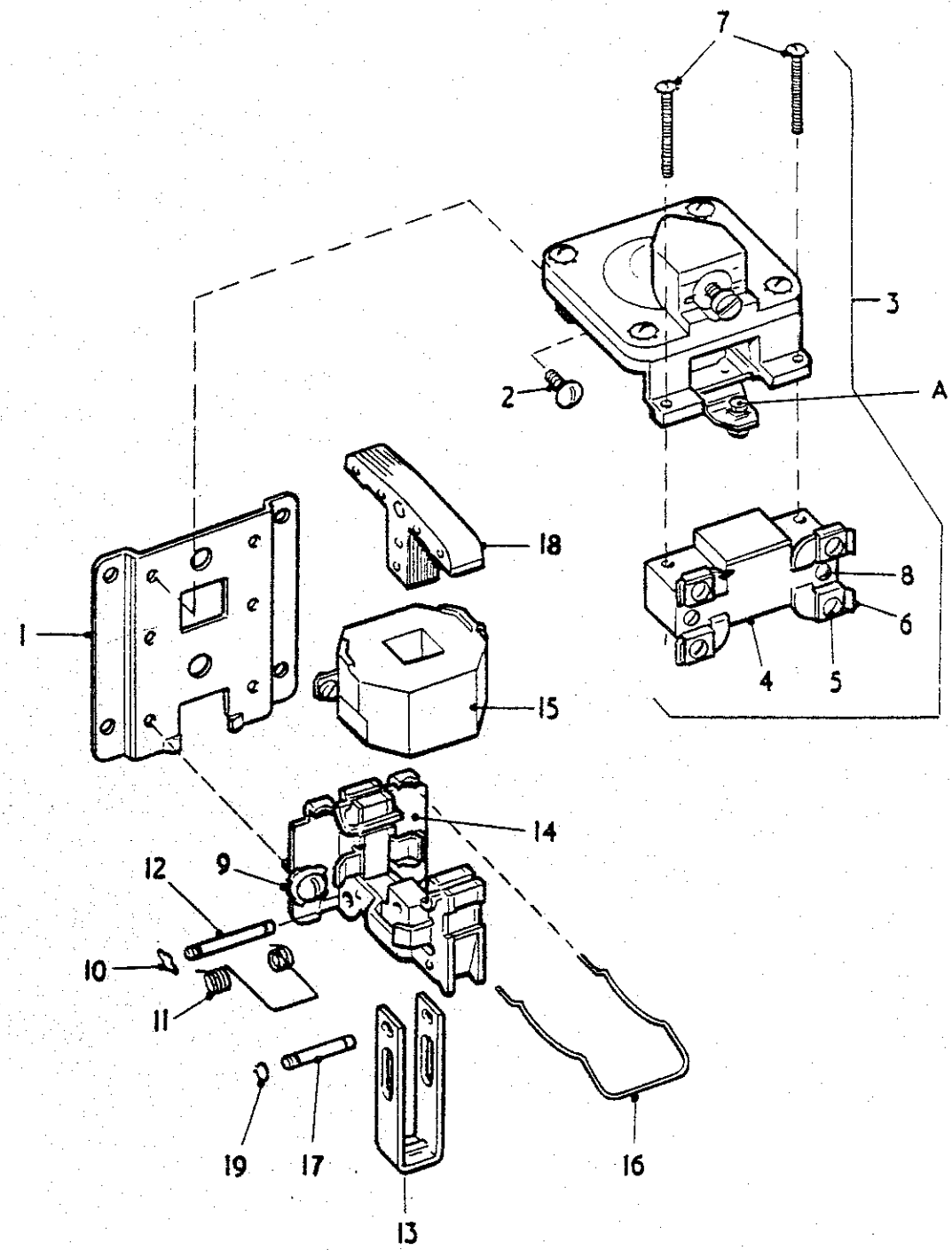

1	BASE PLATE	11	RETURN SPRING
2	SCREW	12	RETAINING PIN
3	PNEUMATIC TIMING UNIT	13	YOKE
4	SNAP SWITCH	14	MAGNET FRAME ASSEMBLY
5	SCREW	15	COIL
6	TERMINAL CLIP	16	SPRING CLIP
7	SCREW	17	ARMATURE PIVOT
8	SCREW	18	ARMATURE ASSEMBLY
9	SCREW ASSEMBLY	19	RING
10	RETAINER	A	ACTUATING SCREW

PNEUMATIC TIMING RELAY
Type AO 1E

SECTION 15
FIGURE 8

8602

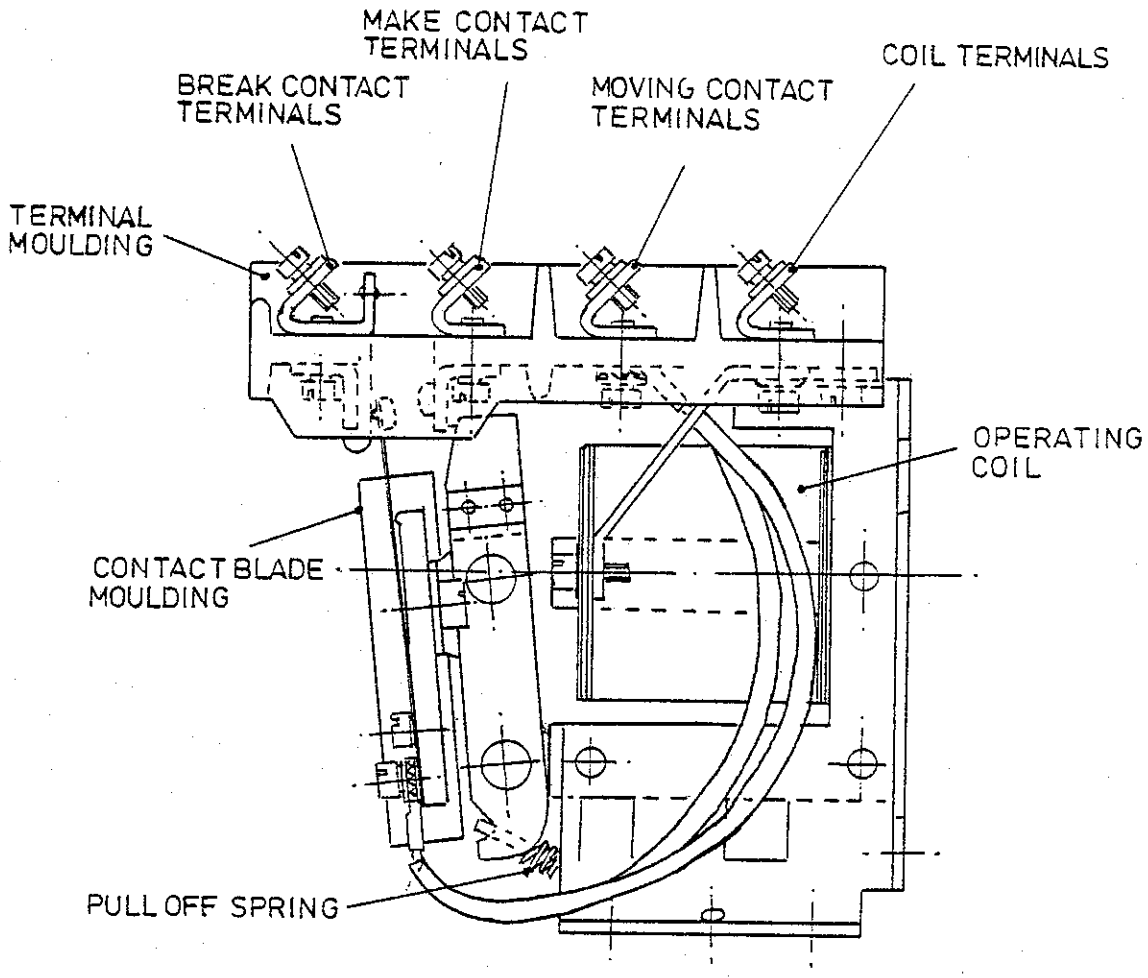

ENBRAY RELAY TYPE 8Z

SECTION 15

FIGURE 9

8625

SECTION 16

EQUIPMENT DATA SHEETS

EQUIPMENT DATA SHEETS

Customer: British Rail Engineering Ltd. for C.I.E.
Equipment Type: Type UP32 Underframe Package Air Conditioning Unit
System Voltage: 380 Volts, 3 phase, 50 Hz.
24 volts D.C. control
Circuit Diagram: CD 333481
Electrical components are identified in the listing by their circuit reference.

AIR CONDITIONING UNIT Pt No 333028
Type: UP32
Outline Drawing: R 333842
General Arrangement Drawing: J 333028
Manufacturer: Stone Transportation

Incorporating:-

Compressor (C), Pt No 707645
Manufacturer: Dunham Bush Ltd.
Type: 75 UPH5(Q) Semi-hermetic with single stage solenoid unloading (240 volt, 50 Hz solenoid USV), 1 3/8" ODF suction valve and 1 1/8" ODF discharge valve. Terminal box weatherproofed and equipped with 4 - 7/8" dia conduit knock-outs. Motor wound for 380 volts, 3 phase, 50 Hz, D.O.L. starting.
Outline Drawing: K 333383

Condenser Coil Assembly, Pt No 333195
Type: CE529
Manufacturer: Millex Ltd.
Arrangement Drawing: Z 333195

Condenser Fan, Pt No 333382
Manufacturer: Turngrove Fans Ltd.
Type: 24", 26°, 9 blade impeller
Air Flow: 11 900 m^3/h at 23 mm S.W.G.

Condenser Fan Motor (CF), Pt No 333402

Manufacturer: G.E.C. Machines Ltd.

Type: D100L, IP55 enclosure pad mounted, air stream rated

Rating: 1.865 kW, 380 volt, 3 phase, 50 Hz., 1425 RPM

Evaporator Coil Assembly, Pt No 333196

Manufacturer: Millex Ltd.

Including:

Thermostatic Expansion Valve

Manufacturer: Sporlan

Type: PFE-8-CP60, 5/8" x 1 3/8" ODF with 1/4" ODF equaliser and standard factory set superheat. Distributor type 1126-22-3/16"-10

Evaporator Fan and Motor Assembly, Pt No 333343

Manufacturer: Carter Howden Ltd.

Fan Type: Centrifugal 12 1/4" C/2 Taperlock bush

Air Flow: 3700 m^3/h at 70 mm S.W.G.

Evaporator Fan Motor (VEF), Pt No 333369

Manufacturer: G.E.C. Machines Ltd.

Type: D90L, IP55 enclosure, flange mounted, T.E.F.C.

Rating: 1.5 kW, 380 volt, 3 phase, 50 Hz, 1425 RPM

Liquid Receiver and Filter Unit, Pt No. 333362

Manufacturer: Stone Transportation

Arrangement Drawing: Y 333362

Liquid Line Solenoid Valve (LLSV) Pt No 700435

Manufacturer: Sporlan

Type: B14S2, 5/8" ODF, 380 volt, 50 Hz.

Damper Solenoids (FADS,LLDS), Pt No 707726

Manufacturer: Warner Electric

Type: TT10, 220 volt, 50 Hz.

Return Spring Tension: 5.5-6.5 kgf

(See Section 14)

High/Low Pressure Cut-out Switch (HP/LP1), Pt No 707725

Manufacturer: Ranco Controls Ltd.

Type: Dual Pressure, code 017-6705 with manual reset on the low-pressure side

Settings: Low Pressure: cut-out at 0.34 bar (5 P.S.I.G.)
cut-in at 1.00 bar (15 P.S.I.G.)
Automatic Reset

High Pressure: cut-out at 18.6 bar (270 P.S.I.G.)
Manual reset below 15.2 bar
(220 P.S.I.G.)

Unloading Pressure Switch (LP2), Pt No 705004

Manufacturer: Ranco Controls Ltd.

Type: Single Pressure, code 016-6703 with automatic reset

Setting: Cut out at 1.93 bar (28 P.S.I.G.)
Cut in at 2.55 bar (37 P.S.I.G.)

Ambient Temperature Thermostat (AT1) Pt No 707757

Manufacturer: Trafag

Type: Ambistat BR41/198/1003/402

Heater Unit, Pt No 333291

Manufacturer: Redring Electric Ltd.

Rating: 24 kW total in 3 banks of 10 kW, 7 kW and 7 kW, 380 volt, 3 ph, 50Hz.

Thermostat (OHS): S.E.I. type 20400D/0404350/30

Air Filter Unit

Manufacturer: Interfilter Ltd.

Type: IF2 HEG92, disposable filter element

Coach Thermostat (T1/1, T1/2, T1/3, T1/4)

Not supplied by Stone Transportation

T1/1 - Set to trip at 22°C, resets at 21°C (CR energised)

T1/2 - Set to trip at 21°C, resets at 20°C (HC1 de-energised)

T1/3 - Set to trip at 20°C, resets at 19°C (HC2 de-energised)

T1/4 - Set to trip at 18°C, resets at 17°C (HC3 de-energised)

Fuse Panel Assembly, Pt No 333403

Arrangement Drawing No. R 333403

Fuse Holders (HF1-9)

Type: GEC Red Spot RS20P

Fuses: GEC Type N1T20A

Circuit Breaker Panel Assembly, Pt No 333342

Arrangement Drawing No: R 333342

Incorporating:

Circuit Breaker (MCB1,MCB2)

Manufacturer: Ottermill Chilton Ltd.

S.T. Specification: T 7320

Type: BRP3040, triple pole

Rating: 40 amps

Time Lag: 14-60 seconds at 200% rated current (Thermal Trip)

Circuit Breakers (MCB3, MCB4)

Manufacturer: Ottermill Chilton Ltd

S.T. Specification: T 7321

Type: BRP 1005, single pole

Rating: 5 amps

Time Lag: 35-120 seconds at 200% rated current

Push Buttons (TB1, TB2)

Manufacturer: Square D Ltd

Each comprising:

Operator type TR51

Contact Block type TB

Contact Block type TF

Signal Lamps (TL1,TL2)

Manufacturer: Arcolectric Ltd

Type: SL81C Amber (TL1)

SL81C Green (TL2)

Main Control Panel Assembly, Pt No 333341

Arrangement Drawing No: J 333341

Incorporating:

Supply Contactors (SC1,SC2)

Manufacturer: M.T.E. Ltd.

S.T. Specification: T 7322

Type: AXC3, ref 01/332/50/240 + 2 x 01/51/20

Triple pole with 4 N/O & 2 N/C aux. contacts

Coil Voltage: 220/240 V 50 Hz.

Pull-in Volts: 187 V max with coil hot

Max. Volts: 252 V continuous

Fitted with mechanical interlock ref 01/03999/016

Heating and Cooling Contactors (C1,C2,HC1,HC2,HC3)

Manufacturer: M.T.E. Ltd.

S.T. Specification: T 7323

Type: AXC1, ref 01/0313/50/240, 4 pole

with 2 N/O & 2 N/C aux. contacts

Coil Voltage: 220/240 V. 50 Hz.

Pull-in Volts: 187 V. max with coil hot

Max. Volts: 252 V. continuous

Vent Fan Overload Relay (OL1)

Manufacturer: M.T.E. Ltd.

S.T. Specification: T 4410

Type: UOL1/3 with heater 01/153/8
and shield ref 01/156/10

Range: 4.1-6.3 amps

Setting: 4.5 amps

Test: mid-position (4.15 amps), set for hand reset
With main poles connected in series
Check for 30 minutes for continuous rating at 5.2 amps
Increase current to 10.4 amps; tripping should occur within 21 to 60 seconds
Reset overload and repeat last test with only 2 poles connected.
Single phase trip to be within 21-60 seconds

Compressor Motor Overload Relay (OL2)

Manufacturer: M.T.E. Ltd.

S.T. Specification: T 7327

Type: UOL1/3 with heater 01/153/12

Range: 21-31 amps

Setting: Min (21 amps)

Test: mid position (26 amps), set for hand reset
With main poles connected in series check for continuous rating at 26 amps for 30 minutes.
Increase current to 52 amps; tripping should occur within 20-60 seconds
Reset overload and repeat last test with only 2 poles connected. Single phase trip to be within 20-60 seconds

Condenser Fan Overload Relay (OL3)

Manufacturer: M.T.E. Ltd.

S.T. Specification: T 5856

Type: UOL1/3 with heater 01/153/9 and shield ref 01/156/10

Range: 6.3-9.4 amps

Setting: Min (6.3 amps)

Condenser Fan Overload Relay (cont'd)

Test: mid-position (7.8 amps), set for hand reset.
With main poles connected in series check for 30 minutes for continuous current at 6 amps.
Increase current to 15.6 amps; tripping should occur within 21 to 60 seconds
Reset overload and repeat last test with only 2 poles connected.
Single phase trip to be within 21-60 seconds

Fresh Air Damper Relay (FADR)

Cooling Relay (CR)

Manufacturer: M.T.E. Ltd.
S.T. Specification: T 7324
Type: AXCR, ref 01/0420/50/240, 4 pole (3 N/O, 1 N/C)
Rating: 10 amps
Coil Voltage: 220/240 V 50 Hz.
Pull-in Volts: 187 V max. with coil hot
Max. Volts: 252 V continuous

Fan Series Relay (FSR)

Manufacturer: ENBray Ltd.
S.T. Specification: T 7326
Type: 8Z1 (2 pole N/O)
Rating: 5 amps
Coil: Continuously at 4 amps, to withstand inrush current of 24 amps for 2 seconds max.
Pull-in Current: 3.4 amps max.
Release current: 1.5 to 2.0 amps

Start Delay Relay (SDR)

Manufacturer: Square D Ltd.
S.T. Specification: T 4861
Type: AO-1E, with N/O contact
Coil Voltage: 220 V, 50 Hz.
Setting: Contact to close nominally 5 seconds after energisation

D.C. Control Relays (R1,R2)

Manufacturer: Pye Electro Devices Ltd.

S.T. Specification: T 7325

Type: 63.002.346.361 plug in relay with base 9291709
3 pole C/O

Coil Voltage: 24 V D.C. (300 ohms)

Pull-in Volts: 18 V max with coil hot

Release Volts: between 2.5 and 6.0 volts

Power Plugs (A & B)

Type: 5 pin; B.R. Cat No 54/84627

Control Plug

Type: 7 pin; B.R. Cat No 54/85623

Thermostat Socket

Type: 7 pin; B.R. Cat No 54/86142

Test Socket

Type: 12 pin; B.R. Cat No 64/2429

Refrigerant

Type: R12

Weight of UP32 refrigerant charge: 13.6 kg (30 lbs)

RECOMMENDED LUBRICANTS

COMPRESSOR

Approved Oil:	*Mobil*	*Arctic 155*
Alternatives:	*Texaco*	*Capella WF32*
	Sun Oil Co	*Suniso 3GS*
	Shell	*Clavus 32*

Capacity: 4.75 litres

CONDENSER AND EVAPORATOR FAN MOTORS

Approved Grease: Shell Alvania RA